P:\13\V20\302002\302002.dwg Tue 07 Oct 2014 5:33pm

ABBREVIATIONS

A, AMP	AMMETER, AMPERE
AC	ALTERNATING CURRENT
ACB	AIR CIRCUIT BREAKER
AF	AMPERE FRAME
AFCI	ARC FAULT CIRCUIT INTERRUPTER
AFD	ADJUSTABLE FREQUENCY DRIVE
AFF	ABOVE FINISHED FLOOR
AIC	AMPS INTERRUPTING CURRENT
ANN	ANNUNCIATOR
AS	AMMETER SWITCH
AT	AMP TRIP
ATS	AUTOMATIC TRANSFER SWITCH
AWG	AMERICAN WIRE GAUGE
BC	BARE COPPER
BFF	BELOW FINISHED FLOOR
BKR	BREAKER
BLDG	BUILDING
BMS	BUILDING MANAGEMENT SYSTEM
BOC	BOTTOM OF CONDUIT
BOD	BOTTOM OF DUCT
BOP	BOTTOM OF PIPE
BOT	BOTTOM OF TRAY
C	CONDUIT, COIL
CAP	CAPACITOR
CAT.#	CATALOG NUMBER
CB	CIRCUIT BREAKER
CCTV	CLOSED CIRCUIT TELEVISION
CLK	CLOCK
CO	CONDUIT ONLY
CPT	CONTROL POWER TRANSFORMER
CR	CONTROL RELAY
CT	CURRENT TRANSFORMER
(D)	DEMOLISH, DEMO
DC	DIRECT CURRENT
DIA	DIAMETER
DIV	DIVISION
△	DELTA CONNECTED
(E), EX	EXISTING
EL	ELEVATION
ELEC	ELECTRICAL
EM	EMERGENCY
EMH	ELECTRICAL MANHOLE
EMO	EMERGENCY MANUAL OFF
EMT	ELECTRICAL METALLIC CONDUIT
EOL	END-OF-LINE DEVICE
ETM	ELAPSED TIME METER
ETR	EXISTING TO REMAIN
(F)	FUTURE
FA	FIRE ALARM
FACP	FIRE ALARM CONTROL PANEL
FBO	FURNISHED BY OTHERS
FCS	FACILITY CONTROL SYSTEM
FDR	FEEDER
FU	FUSE
FVNR	FULL VOLTAGE NON-REVERSING
FVR	FULL VOLTAGE REVERSING
GND	GROUND
GFCI	GROUND FAULT CIRCUIT INTERRUPTER
HH	HANDHOLE
HID	HIGH INTENSITY DISCHARGE
HOA	HAND-OFF-AUTOMATIC
HVAC	HEATING, VENTILATION, AND AIR CONDITIONING
HP	HORSEPOWER
I.D.	IDENTIFICATION
IER	INTEGRATED EQUIPMENT RATING
I&C	INSTRUMENTATION AND CONTROL
IMC	INTERMEDIATE METALLIC CONDUIT
I/O	INPUT/OUTPUT
J, JB	JUNCTION BOX
KCMIL	1000 CIRCULAR MIL
KV	KILOVOLT
KVA	KILOVOLT-AMPERE
KVAR	KILOVAR
KW	KILOWATT
KWH	KILOWATT-HOUR
LAN	LOCAL AREA NETWORK
LTG	LIGHTING
LV	LOW VOLTAGE
M	MAG CONTACTOR, COIL / CONTACT
MAX	MAXIMUM
MCB	MAIN CIRCUIT BREAKER
MCC	MOTOR CONTROL CENTER
MCP	MOTOR CIRCUIT BREAKER
MH	MANHOLE
MIN	MINIMUM
MLO	MAIN LUGS ONLY
MTD	MOUNTED
N	NEUTRAL
NA	NON-AUTOMATIC
N.C.	NORMALLY CLOSED
NEC	NATIONAL ELECTRICAL CODE
NEMA	NATIONAL ELECTRIC MANUFACTURER'S ASSOCIATION
NIC	NOT IN CONTRACT
N.O.	NORMALLY OPEN
NTS	NOT TO SCALE
OCB	OIL CIRCUIT BREAKER
OFCI	OWNER FURNISHED, CONTRACTOR INSTALLED
OFOI	OWNER FURNISHED, OWNER INSTALLED
OL	OVERLOAD RELAY
P	POWER
PF	POWER FACTOR
PL	PILOT LIGHT
PB	PUSHBUTTON SWITCH
PC	PHOTOCELL
PIV	POST INDICATOR VALVE
PNL	PANEL
ø, PH	PHASE
PVC	POLYVINYL CHLORIDE
QTY	QUANTITY
(R)	RELOCATED
REC	RECEPTACLE
RCY	RACEWAY
RF	RADIO FREQUENCY
RGS	RIGID GALVANIZED STEEL
RMS	ROOT MEAN SQUARE
RTM	RUNNING TIME METER
RVNR	REDUCED VOLT. NON-REVERSING
S.C.	SHORT CIRCUIT
SEC	SECONDS
SES	SERVICE ENTRANCE SUBSTATION
SP	SPARE
SS	STAINLESS STEEL
STD	STANDARD
SW	SWITCH
SWBD	SWITCHBOARD
SWGR	SWITCHGEAR
SYM	SYMMETRICAL
SYNC	SYNCHRONIZER
2S1W	TWO SPEED, ONE WINDING
2S2W	TWO SPEED, TWO WINDING
TSTAT	THERMOSTAT
TB	TERMINAL BLOCK
TBD	TO BE DETERMINED
TDR	TIME DELAY RELAY
TS	TAMPER SWITCH
TSP	TWISTED SHIELDED PAIR
TYP	TYPICAL
UPS	UNINTERRUPTIBLE POWER SUPPLY
UNO	UNLESS NOTED OTHERWISE
V	VOLTMETER, VOLT
VA	VOLT-AMPERE
VESDA	VERY EARLY SMOKE DETECTION APPARATUS
VFD	VARIABLE FREQUENCY DRIVE
W	WATT, WIRE
WHD	WATTHOUR DEMAND METER
WP	WEATHERPROOF
XP	EXPLOSION-PROOF
XFMR	TRANSFORMER
Y	WYE-CONNECTED
Z	IMPEDANCE

LIGHTING

FIXTURE TYPE. SEE SCHEDULE.
SOLID = EMERGENCY BACKUP (REQUIRES HOT LEG)
CIRCUIT NUMBER. SUCCEEDING LETTERS INDICATE CONTROLS.
L = VIA LIGHTING CONTROLLER
N = NIGHT LIGHT (UNSWITCHED) (REQUIRES HOT LEG)
o = LOCAL SWITCH (LOWER CASE LETTER)
FA 10 FA 9La

FT 10N FT 10b — SAME AS ABOVE FOR ALL FIXTURES SYMBOLS.

- SHOEBOX TYPE, POLE MOUNTED FIXTURE
- SURFACE, PENDANT OR WALL MOUNTED LUMINAIRE
- RECESSED DOWN LIGHT
- LANDSCAPE OR SPECIALTY LIGHT FIXTURE
- EXIT LIGHT-CEILING OR WALL MOUNTED, ARROW INDICATES DIRECTION. SHADING INDICATES FACE OF SIGN. TYPE AS SHOWN.
- BATTERY OPERATED EMERGENCY LIGHT WITH EXIT SIGN WHEN INDICATED
- SAME AS ABOVE, CEILING MOUNTED
- BATT — REMOTE BATTERY

LIGHTING CONTROLS

- $2 — WALL SWITCH, SUBSCRIPT INDICATES TYPE: 2=DOUBLE POLE, 3=THREE WAY, 4=FOUR WAY, D=DIMMER, K=KEY OPERATED, LV=LOW VOLTAGE, P=PILOT LIGHT, T=TIMED SWITCH, WP=WEATHERPROOF
- xy (T) — TANDEM SWITCH. PROVIDE FIXTURES WITH (2) BALLASTS.
- $M.O. — MANUAL OVERRIDE SWITCH. SEE LIGHTING CONTROLLER SPECIFICATIONS.
- (PC) — PHOTOELECTRIC LIGHTING CONTROL, SENSOR AIMED NORTH UNLESS OTHERWISE NOTED.
- (TC) — TIME CLOCK/TIME SWITCH.

OCCUPANCY SENSORS

- $OC1 — WALL MOUNTED, SUBSCRIPT INDICATES TYPE. SEE FIXTURE SCHEDULE FOR SPECIFICATIONS.
- (OC) — CEILING MOUNTED.

RACEWAYS, WIRE, & CABLE

- BRANCH CIRCUIT(S) HOMERUN TO PANELBOARD. 3/4" CONDUIT UNLESS NOTED OTHERWISE. FIELD ROUTE. SUPPORT PER NEC.
- 5#12 AWG CONDUCTORS, (1) NEUTRAL, (3) HOT [A, B, & C PHASE] 1 GROUND) IN 3/4" CONDUIT.
- 5#10 AWG CONDUCTORS, (1) NEUTRAL, (3) HOT [A, B, & C PHASE] 1 GROUND) IN 3/4" CONDUIT.
- CONDUIT AND CONDUCTORS ABOVE GRADE
- CONDUIT AND CONDUCTORS BELOW GRADE OR SLAB.
- CONDUIT TURN DOWN/CONDUIT TURN UP
- CONDUIT, STUBBED AND CAPPED
- G — G=GROUND ELECTRODE CONDUCTOR
- CONDUIT SEAL FITTING

POWER CONDUIT FILL EXAMPLE: (2) 4"C., 4 #500, 1 #1/0G.

- GROUND CONDUCTOR SIZE
- QUANTITY OF GROUND CONDUCTORS
- CONDUCTOR SIZE (AWG OR KCMIL)
- QUANTITY OF PHASE, NEUTRAL, OR CONTROL CONDUCTORS (NEUTRAL CONDUCTORS MAY BE SPECIFIED WITH AN 'N' SUFFIX)
- CONDUIT SIZE (SEE SPECIFICATION FOR TYPES)
- TOTAL QUANTITY OF IDENTICAL CONDUITS AS SPECIFIED (IF MULTIPLE)

GROUNDING

- GROUND ROD, GROUND WELL
- GROUNDING BUS
- EXOTHERMIC WELD, COMPRESSION CONNECTION
- SURGE PROTECTION DEVICE (SPD)

WIRING DEVICES AND BOXES

JUNCTION BOXES, HANDHOLES, AND MANHOLES

- EMH — ELECTRICAL MANHOLE OR HANDHOLE (EHH)
- JUNCTION BOX, SIZED PER NEC (U.N.O.)

WIRING DEVICES - POWER

- CONNECTION POINT TO EQUIPMENT SPECIFIED, SUPPLIED AND INSTALLED UNDER OTHER DIVISIONS. RACEWAY, CONDUCTORS AND CONNECTIONS UNDER THIS DIVISION.
- L5-30 — SPECIAL PURPOSE RECEPTACLE NEMA CONFIGURATION AND AMPERAGE AS INDICATED.
- CONVENIENCE RECEPTACLE-SINGLE, DUPLEX, 4-PLEX, MTD @ 18" AFF, UNLESS NOTED OTHERWISE.
  - WP – WEATHERPROOF IN-USE METALLIC, COOPER #WIUMV(H*)-1 [*HORIZONTAL AS NEEDED]
  - WPF – WEATHERPROOF, FLUSH SERVICE, COOPER #WBR(VS/VM/HR/HB)C (STYLE TO SUIT)
  - GFCI – GROUND FAULT CIRCUIT INTERRUPTER
  - IG – ISOLATED GROUND
- SAME AS ABOVE, FLOOR MOUNTED
- CLG — SAME AS ABOVE, CEILING MOUNTED
- SAME AS ABOVE, MOUNTED ABOVE COUNTER
- TMB — 3/4" THICK FIRE-TREATED PLYWOOD FOR TELEPHONE MOUNTING BOARD WITH (1) DEDICATED FOURPLEX OUTLET AND #6 COPPER BOND TO BUILDING GROUND ELECTRODE SYSTEM. TELEPHONE CONDUIT PER UTILITY SPECIFICATIONS.

WIRING DEVICES - COMMUNICATIONS

- DATA/TELEPHONE/COMBINATION TEL./DATA OUTLET
- TELEVISION OUTLET
- SAME AS ABOVE, FLOOR MOUNTED

WIRING DEVICES - MISC

- (T) — THERMOSTAT
- PUSHBUTTON OR CONTROL DEVICE (SEE ABBREVIATION FOR TYPE).
- $M — MOTOR RATED SWITCH OR MANUAL MOTOR STARTER WITH OVERLOADS (WHEN NOT INTERAL TO MOTOR)
- $ML — SAME AS ABOVE, LOCKABLE
- R — RELAY

WIRING DEVICES - SPECIAL SYSTEMS

- TAG — TAG: CR = CARD READER, DC = DOOR CONTACTS, KP = KEY PAD
- DC = DOOR CONTACTS
- S — SPEAKER/HORN
- TV — TELEVISION
- CCTV — CAMERA

ANNOTATIONS

- (1) KEYED NOTE
- (A) CONTINUATION
- 4B FEEDER TYPE
- P40 EQUIPMENT CONDUIT NUMBER
- E1D54F7 EQUIPMENT TAG
- 16120 SPECIFICATION NUMBER
- 220 EQUIPMENT BILL-OF-MAT'L REFERENCE
- 2 / 5.0 DETAIL REFERENCE

PRIMARY EQUIPMENT

1-LINE PLAN — MAJOR EQUIPMENT

- UTILITY POWER POLE
- UTILITY PAD MOUNT TRANSFORMER

PLAN — MAJOR EQUIPMENT

- MAJOR ELECTRICAL EQUIPMENT OR DEVICE, i.e., MOTOR CONTROL CENTER, SWITCHBOARD, ETC.

SWITCHBOARDS AND PANELBOARDS

PANELBOARD – SURFACE OR FLUSH MOUNTED AS INDICATED. 'HATCHED' AREA REPRESENTS NEC REQUIRED CLEARANCE WIDTH MINIMUM OF 30". DEPTH AS REQUIRED BY NEC ART 110, HATCHED AREA NOT DRAWN TO SCALE.

1-LINE PLAN — TRANSFORMERS

POWER TRANSFORMER SUBSTATION OR DISTRIBUTION TYPE. KVA, IMPEDANCE, VOLTAGE, AND CONNECTIONS ARE AS NOTED.

1-LINE PLAN — CIRCUIT BREAKERS

TRIP/FRAME, CB 30 — CIRCUIT BREAKER, TRIP/FRAME RATING AS SHOWN. ENCLOSED WHEN SHOWN ON PLAN.

1-LINE PLAN — DISCONNECTS & FUSES

FUSE/SWITCH, F 30 — DISCONNECT SWITCH, RATING AS SHOWN, NF = NON-FUSED. ENCLOSED WHEN SHOWN ON PLAN.

1-LINE PLAN — MOTORS & MOTOR STARTERS

- (M) — MOTOR CONNECTION. FOR HORSEPOWER, REFER TO ONE-LINE DIAGRAM OR EQUIPMENT SCHEDULE
- 1 — CONTACTOR, NEMA SIZE AS SHOWN. ENCLOSED WHEN SHOWN ON PLAN.
- 1, OL — STARTER, NEMA SIZE AS SHOWN. ENCLOSED WHEN SHOWN ON PLAN.
- FUSE/SWITCH, 1, OL — COMBINATION STARTER, NEMA SIZE AS SHOWN CIRCUIT BREAKER OR FUSED DISCONNECT SWITCH TYPE. ENCLOSED WHEN SHOWN ON PLAN.

SHEET INDEX

REV NO	DATE	DESC.
0	11/01/13	FOR PERMIT
1	03/07/14	FOR BID
2	04/15/14	FOR PERMIT
3	10/07/14	CITY COMM

SHEET NO	SHEET TITLE	REV NO	DATE	HIST.
E0.1	ELECTRICAL LEGEND & ABBREVIATIONS	3	10/07/14	0,1,2,3
E0.2	SCHEDULES	2	04/15/14	0,1,2
E0.3	FIRE ALARM RISER	0	04/15/14	0
E1.0	ELECTRICAL SITE PLAN	3	10/07/14	0,1,2,3
E1.1	PHOTOMETRIC SITE PLAN	0	04/15/14	0
E1.2	SITE LIGHTING CUTSHEETS	3	10/07/14	0,2,3
E2.0	MAIN LEVEL – POWER & SPECIAL SYSTEMS PLAN	2	04/15/14	0,1,2
E2.1	UPPER LEVEL – POWER & SPECIAL SYSTEMS PLAN	2	04/15/14	0,1,2
E3.0	MAIN LEVEL – LIGHTING PLAN	3	10/07/14	0,1,2,3
E3.1	UPPER LEVEL – LIGHTING PLAN	3	10/07/14	0,1,2,3
E5.0	ENLARGED PLANS	0	04/15/14	0
E6.0	ONE-LINE DIAGRAM & SCHEDULE	2	04/15/14	0,1,2
E7.0	PANEL SCHEDULES	3	10/07/14	0,2,3
E8.0	ELECTRICAL DETAILS	1	04/15/14	0,1
E8.1	ELECTRICAL DETAILS	1	04/15/14	0,1

CODES & STANDARDS

GENERAL	EDITION
NATIONAL ELECTRICAL CODE (NFPA 70)	2005*
LOCAL AND STATE CODES AND CODE AMENDMENTS	TOWN OF CAMP VERDE
TOWN OF CAMP VERDE P&Z ORDINANCE, SECTION 405-OUTDOOR LIGHTING	2011
UTILITY SPECIFICATIONS AND REQUIREMENTS	APS
NATIONAL ELECTRICAL SAFETY CODE (NESC)	LATEST
AMERICANS WITH DISABILITIES ACT (ADA)	
INTERNATIONAL BUILDING CODE (IBC)	2006*
INTERNATIONAL MECHANICAL CODE (IMC)	2006*
INTERNATIONAL PLUMBING CODE (IMC)	2006*
INTERNATIONAL RESIDENTIAL CODE (IRC)	2006*
FIRE CODES	**EDITION**
INTERNATIONAL FIRE CODE (IFC)	2003*
ENERGY CODES	**EDITION**
INTERNATIONAL ENERGY CONSERVATION CODE (IECC)	2006*

ALL OF THE PRECEDING ARE HEREBY MADE A PART OF THESE SPECIFICATIONS. THEY SHALL BE SATISFIED BY THE CONTRACTOR AT NO ADDITIONAL EXPENSE TO THE OWNER.

*WITH COUNTY ORDINANCE CODE AMENDMENTS

LIGHTING MANDATORY MEASURES:

INTERIOR LIGHTING:

1. TOTAL PROPOSED WATTS MUST BE LESS THAN OR EQUAL TO ALLOWED WATTS.
   - SEE CALCULATIONS.

CONTROLS, SWITCHING, AND WIRING:

2. INDEPENDENT CONTROLS FOR EACH SPACE (SWITCH/OCCUPANCY SENSOR)
   EXCEPTIONS:
   - AREAS DESIGNATED AS SECURITY OR EMERGENCY AREAS THAT MUST BE CONTINUOUSLY ILLUMINATED.
   - LIGHTING IN STAIRWAYS OR CORRIDORS THAT ARE ELEMENTS OF THE MEANS OF EGRESS.
3. EACH SPACE PROVIDED WITH A MANUAL CONTROL TO PROVIDE UNIFORM LIGHT REDUCTION BY AT LEAST 50%.
   EXCEPTIONS:
   - ONLY ONE LUMINAIRE IN SPACE.
   - AN OCCUPANT SENSING DEVICE CONTROLS THE AREA.
   - THE AREA IS A CORRIDOR, STOREROOM, RESTROOM, PUBLIC LOBBY, OR SLEEPING UNIT.
   - AREAS THAT USE LESS THAN 0.6W/SF.
4. AUTOMATIC LIGHTING SHUTOFF CONTROL IN BUILDINGS LARGER THAN 5,000 SQFT.
   EXCEPTIONS:
5. PHOTOCELL/ASTRONOMICAL TIMECLOCK SWITCH ON EXTERIOR LIGHTS.
   EXCEPTIONS:
   - LIGHTING INTENDED FOR 24-HOUR USE.
6. TANDEM WIRED ONE-LAMP AND THREE-LAMP BALLASTED LUMINARIES (NO SINGLE-LAMP BALLASTS).
   EXCEPTIONS:
   - ELECTRONIC HIGH-FREQUENCY BALLASTS. LUMINARIES ON EMERGENCY CIRCUITS OR WITH NO AVAILABLE PAIRS.

DESCRIPTION OF WORK

TWO-STORY LIBRARY.

THE WORK SHALL INCLUDE, BUT NOT LIMITED TO, FURNISHING & INSTALLING THE FOLLOWING:

1. UTILITY SERVICE CONDUIT, TRENCHING, EQUIPMENT (PER UTILITY STANDARDS).
2. GENERAL POWER DISTRIBUTION SYSTEM.
3. GROUNDING SYSTEM.
4. GENERAL LIGHTING & LIGHTING CONTROLS, INTERIOR & EXTERIOR.
5. EMERGENCY LIGHTING.
6. TELEPHONE, CABLE, LAN (RACEWAYS, CABLE TRAYS ONLY).

- △ DATA/TEL CABLING, INSTALLATION, ANY CABLE SUPPORTS OR RACEWAYS NOT INDICATED, ETC. SHALL BE PROVIDED BY CABLE INSTALLER.

SPECIFIC EQUIPMENT INSTALLATIONS INCLUDE, BUT NOT LIMITED TO, THE FOLLOWING:

1. SERVICE ENTRANCE SWITCHBOARDS.

ADDITIONAL REQUIREMENTS:

THIRD PARTY TESTING SHALL BE REQUIRED FOR THE FOLLOWING:

- HI-POT TESTING.

PROVIDE ALL START-UP, PRE-FUNCTIONAL CHECKLISTS, FUNCTIONAL TESTING, DOCUMENTATION, ETC. AS REQUIRED BY COMMISIONING AGENT & SPECIFICATION 01810.

PROVIDE ALL DOCUMENTATION REQUIRED FOR LEED CREDITS ASSOCIATED WITH PROJECT ELECTRICAL SYSTEMS. COORDINATE WITH DESIGN TEAM AND PROJECT LEED COORDINATOR.

FIRE ALARM SCOPE:

CONSTRUCTION SCOPE AND PRIMARY FIRE ALARM DATA:

A. FIRE ALARM CONTROL PANEL IS:

NEW – INSTALL A COMPLETE SYSTEM.

BASIS FOR FIRE ALARM SYSTEM:

- OCCUPANY/OCCUPANT LOAD. SEE PROJECT DATA.
- ELEVATOR CODE
- OWNER REQUIREMENT

DESIGN SCOPE:

THE FIRE ALARM DESIGN INCLUDED IN THIS PACKAGE IS:

_ CONCEPTUAL – INCLUDES SYSTEM CONFIGURATION, SPECIFICATIONS, AND GENERAL EQUIPMENT AND DEVICE LAYOUT. ENGINEERED PLANS SHALL BE SUBMITTED BY THE FIRE ALARM SYSTEM INSTALLER AS DEFERRED SUBMITTAL. FINAL DEVICE LOCATIONS AND QUANTITIES ARE SUBJECT TO AHJ REVIEW.

△

△

REVISIONS	BY
△1 3/7/14	WB
△2 4/15/14	WB
△3 10/7/14	WB

VoltaUS CONSULTING
3666 N. Miller Road, Suite 101, Scottsdale, AZ 85251
Tel. (480) 659-0511, VoltaUS.com

THIS DRAWING CONTAINS DATA AND INFORMATION WHICH IS THE PROPERTY OF VOLTAUS. THIS DRAWING IS RECEIVED IN CONFIDENCE AND THE SPECIFIC CONTENTS MAY NOT BE COPIED OR DISCLOSED WITHOUT PRIOR WRITTEN CONSENT OF VOLTAUS. WHEN THIS DRAWING IS DIGITALLY SIGNED AND TRANSMITTED IN ELECTRONIC FORMAT, THE DRAWING CONTAINS A DIGITAL SIGNATURE IN COMPLIANCE WITH A.R.S. 41 & 44 AND ARIZONA TECHNICAL BOARD OF REGISTRATION. ELECTRONIC COPIES OF CERTIFIED DOCUMENTS ARE STORED WITH VOLTAUS TO PREVENT UNAUTHORIZED MODIFICATIONS.

JOEL WESTERVELT ARCHITECT
93 ARNOLD STREET
CAMP VERDE, ARIZONA 86322
www.joelwesterveltarchitect.com
928-567-2255

10/07/14
Registered Professional Engineer (Electrical) CERTIFICATE NO. 30536 WILLIAM J. BETHURUM, IV ARIZONA, U.S.A. Date Signed
SEAL: EXPIRES:09/30/17

CAMP VERDE COMMUNITY LIBRARY
BLACK BRIDGE ROAD
CAMP VERDE, ARIZONA

Date 08/12/13
Scale AS NOTED
Drawn ETS
Job 302002
Sheet E0.1

(–) LEGEND	1 EXTERIOR AREA/SURFACE	2 QUANTITY	3 ALLOWED WATTS/UNIT	4 TRADABLE WATTAGE	5 ALLOWED WATTS (BxC)	6 PROPOSED WATTS	
A	PARKING LOTS & DRIVES (SQFT)	37603	0.15	YES	5640	1650	
B	PLAZA	9281	0.2	YES	1856	546	
C	BUILDING FACADES (LF)	48	5	NO	240	120	
D	BUILDING FACADES (UPPER LEVEL) (SQFT)	1212	0.2	NO	242	120	
					0		
					0		
				TOTAL TRADABLE WATTS*	7497	2196	
				TOTAL ALLOWED WATTS	7979	2724	PASS
				TOTAL ALLOWED SUPPLEMENTAL WATTS**	399		

* WATTAGE TRADOFFS ARE ONLY ALLOWED BETWEEN TRADABLE AREAS/SURFACES.
** A SUPPLEMENTAL ALLOWANCE EQUAL TO 5% OF TOTAL ALLOWED WATTAGE MAY BE APPLIED TOWARD COMPLIANCE OF BOTH NON–TRADABLE AND TRADABLE AREAS/SURFACES.

2 EXTERIOR ENERGY CALCS

NO SCALE

AREA SERVED:	SITE	BASIS: FLAGSTAFF CODE
SQUARE–FOOTAGE:	5.8 ACRES	
ALLOWED LUMENS /ACRE:	100000 LUM/ACRE	(ZONE II)
TOTAL ALLOWED LUMENS:	580000 LUMENS	
PROPOSED (SEE BELOW)	199260 LUMENS	
PROJECT COMPLIANCE	380740 LUMENS	66% PASS

A		B	C	D	E
FIXTURE DESCRIPTION	TAG	LAMPS/ FIXT	NUM FIXT	FIXT LUMENS	(C X D)
SITE POLE, FULL CUTOFF	SA/SA3	1–150 PSMH	11	14000	154000
WALL SCONCE, FULL CUTOFF	SB/SBE	1–42W CFL	13	3200	41600
DECORATIVE SPOT, UNSHIELDED	SD	1–10W LED	12	305	3660
					0
			TOTAL		199260

3 SITE LUMEN CALCULATIONS

NO SCALE

SITE LUMEN & EXTERIOR CALCS

A. 5500 LUMENS UNSHIELDED PER NET ACRE, PER TOWN OF CAMP VERDE.

B. TOTAL UNSHIELDED LUMENS <2% OF TOTAL INITIAL DESIGN FIXTURE LUMENS.

C. LIGHTING POWER DENSITY OF EXTERIOR LIGHTING IS LESS THAN 80% AS DEFINED IN ASHRAE 90.1.

D. MAXIMUM ILLUMINATION <0.10fc AT PROPERTY LINE (SEE E1.1).

E. MAXIMUM ILLUMINATION <0.10fc AT 10FT BEYOND PROPERTY LINE (SEE E1.1).

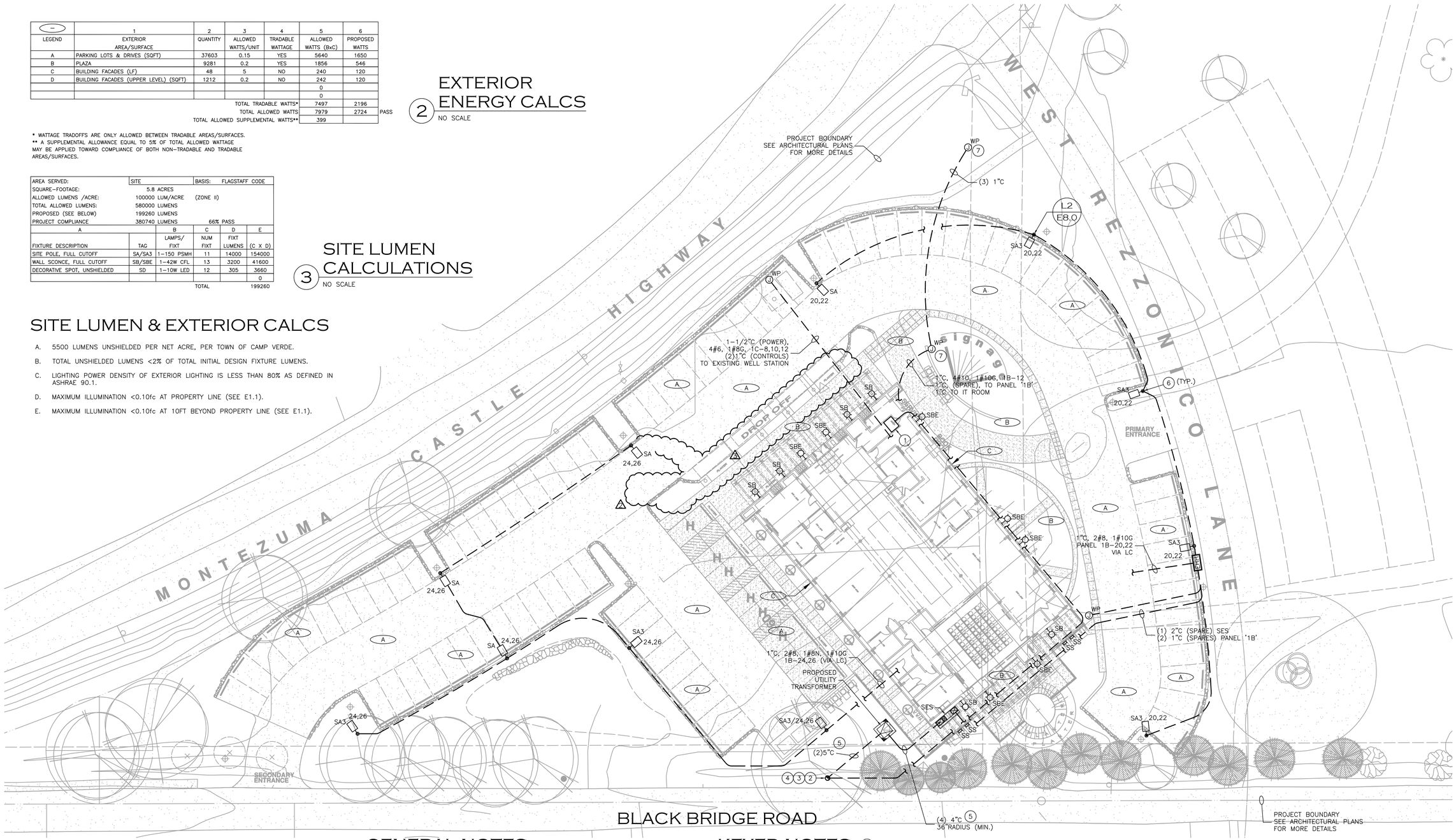

1 ELECTRICAL SITE PLAN

SCALE: 1" = 20' – 0"

GENERAL NOTES

A. REFER TO ELECTRICAL LEGEND AND SPECIFICATIONS FOR ADDITIONAL INFORMATION.

B. UTILITY SERVICE (POWER) – COORDINATE ALL SERVICE REQUIREMENTS WITH UTILITY. PROVIDE AND INSTALL ALL NECESSARY PRIMARY / SECONDARY CONDUIT, TRANSFORMER PADS, ETC. AS REQUIRED BY THE UTILITY PER UTILITY SPECIFICATIONS.COORDINATE TRENCHING WITH UTILITY COMPANIES. UTILIZE COMMON TRENCH WHEN POSSIBLE. PROVIDE ALL TRENCHING AND ASSOCIATED MATERIALS. REFER TO DIVISION 16 SPECIFICATIONS FOR ADDITIONAL REQUIREMENTS.

C. UTILITY SERVICE (TELEPHONE/CABLE) – COORDINATE ALL SERVICE REQUIREMENTS WITH UTILITY. PROVIDE AND INSTALL ALL NECESSARY TRENCHING CONDUITS, JUNCTION BOXES, AND ALL ELSE AS REQUIRED PER UTILITY SPECIFICATIONS.

D. EXTERIOR RECEPTACLES SHALL BE IN–USE WEATHERPROOF COVER, NEMA 3R, SINGLE GANG, VERTICAL DEEP WITH METAL COVER. SEE E0.1 FOR SPECS.

E. PROVIDE DETECTABLE UNDERGROUND LOCATION DEVICE (MIN. #18 COPPER TRACER ATTACHED AT 8FT INTERVALS) IN ALL NON–METALLIC UNDERGROUND CONDUITS.

F. CONTRACTOR SHALL ARRANGE AND ATTEND A NIGHTTIME INSPECTION OF THE ENERGIZED LIGHTING BY OWNER AND SHALL CORRECT ALL NON–CONFORMING ITEMS IDENTIFIED DURING THE INSPECTION PRIOR TO THE CITY ISSUING THE FINAL CERTIFICATE OF OCCUPANCY/COMPLETION.

KEYED NOTES (–)

1. BUILDING MAIN TELEPHONE MOUNTING BOARD. 8'L X 8'H X 3/4"D FIRE TREATED PLYWOOD WITH #6 CU. GROUND PER TELEPHONE CO. REQUIREMENTS AND N.E.C. 800–40(B).
2. ESTIMATED POINT OF CONNECTION (ELECTRIC UTILITY).
3. ESTIMATED POINT OF CONNECTION (TELEPHONE).
4. ESTIMATED POINT OF CONNECTION (CABLE).
5. ESTIMATED UTILITY CONDUIT SIZES ONLY. VERIFY FINAL REQUIREMENTS AND POINTS OF CONNECTION WITH UTILITY.
6. PROGRAM EXTERIOR LIGHT POLES AND SCONCES FOR PHOTOCELL ON, TIMECLOCK OFF OPERATION. CLASS 3 DECORATIVE UPLIGHTS SHALL BE TURNED OFF BY 10PM.
7. INSTALL SEPARATE JUNCTION BOXES FOR POWER AND DATA/LOW VOLTAGE.

CALL TWO WORKING DAYS BEFORE YOU DIG
602-263-1100
1-800-STAKE-IT
(OUTSIDE MARICOPA COUNTY)

REVISIONS	BY
1 3/7/14	WB
2 4/15/14	WB
3 10/7/14	WB

VoltaUS CONSULTING
3868 N. Miller Road, Suite 101, Scottsdale, AZ 85251
Tel: (480) 659-0511, VoltaUS.com

"No portion of this drawing may be copied, reproduced, or used in any manner without the express written permission of VoltaUS Consulting. Any such unauthorized use is prohibited and shall be at the user's sole risk. VoltaUS Consulting assumes no responsibility for damages or liability arising from such unauthorized use."

JOEL WESTERVELT ARCHITECT
93 APACHE STREET
CAMPE VERDE, ARIZONA 86322
www.joelwesterveltarchitect.com
928-567-2355

10/07/14
Registered Professional Engineer (Electrical) CERTIFICATE NO. 30536 WILLIAM J. BETHAUM, IV Date of Signature
SEAL: EXPIRES:09/30/17

CAMP VERDE COMMUNITY LIBRARY
BLACK BRIDGE ROAD CAMP VERDE. ARIZONA

Date 08/12/13
Scale AS NOTED
Drawn ETS
Job 302002
Sheet E1.0

P:\13\020\302002\302002.dwg Tue 07 Oct 2014 5:29pm

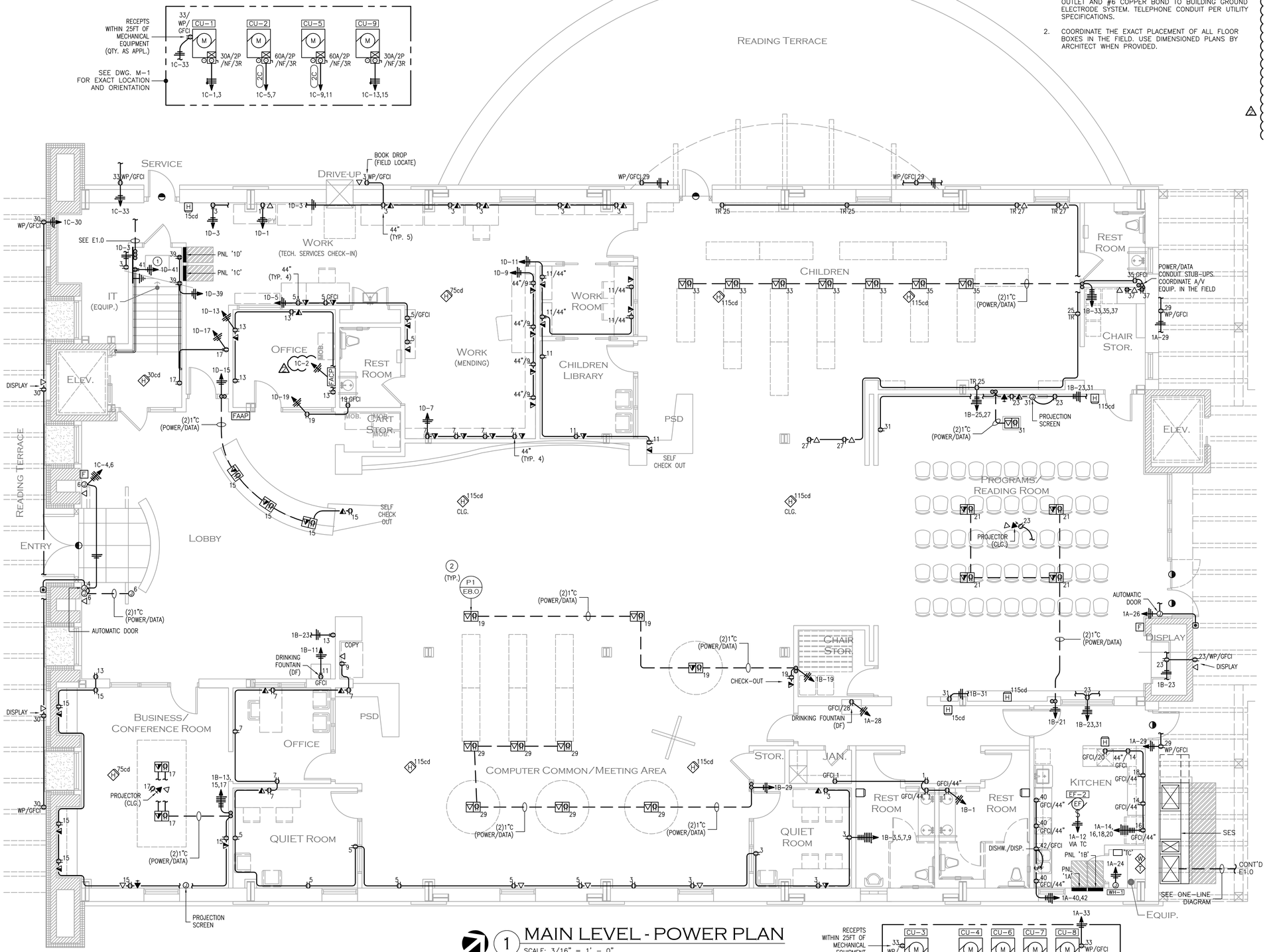

1 MAIN LEVEL - POWER PLAN

SCALE: 3/16" = 1' - 0"

KEYED NOTES

1. 3/4" THICK FIRE-TREATED PLYWOOD FOR TELEPHONE MOUNTING BOARD WITH (1) DEDICATED FOURPLEX OUTLET AND #6 COPPER BOND TO BUILDING GROUND ELECTRODE SYSTEM. TELEPHONE CONDUIT PER UTILITY SPECIFICATIONS.
2. COORDINATE THE EXACT PLACEMENT OF ALL FLOOR BOXES IN THE FIELD. USE DIMENSIONED PLANS BY ARCHITECT WHEN PROVIDED.

GENERAL NOTES

A. REFER TO ELECTRICAL LEGEND AND SPECIFICATIONS FOR ADDITIONAL REQUIREMENTS INCLUDING, BUT NOT LIMITED TO, CODE REQUIREMENTS, EQUIPMENT AND MATERIAL SPECIFICATIONS AND INSTALLATION REQUIREMENTS, SUBMITTAL REQUIREMENTS, DEVICE MOUNTING HEIGHTS, EQUIPMENT IDENTIFICATION, ETC.

B. COORDINATE ALL CONSTRUCTION WITH OTHER TRADES INCLUDING LOCATION OF MECHANICAL EQUIPMENT AND ROUTING OF PIPING, RACEWAYS, DUCTWORK, ETC.

C. SUPPORT ALL RACEWAYS PER NEC. INSTALL CONDUIT WITH 270 DEGREES IN BENDS MAXIMUM WITHOUT PULL POINT. INSTALL JUNCTION / PULL BOXES AS NECESSARY. WHEN SIZES ARE NOT SPECIFIED, SIZE BOXES BASED ON CONDUIT SIZES / FILL PER NEC.

D. MAINTAIN WORKING CLEARANCE ABOUT ELECTRICAL EQUIPMENT PER NEC ART. 110.

E. CONDUIT AND WIRE IS SHOWN DIAGRAMMATICALLY. ACTUAL ROUTING AND REQUIRED NUMBER OF SUPPORTS SHALL BE DETERMINED BY THE CONTRACTOR.

F. WHERE TELEPHONE, DATA, OR SECURITY DEVICES ARE SHOWN, INSTALL OUTLET BOX AND CONDUIT (3/4" UNLESS NOTED OTHERWISE) ABOVE THE CEILING.

G. VERIFY ALL EQUIPMENT LOCATIONS AND DIMENSIONS IN THE FIELD PRIOR TO INSTALLING RACEWAYS AND WIRING.

H. HVAC EQUIPMENT

DISCONNECTING MEANS: PROVIDE AND INSTALL HEAVY DUTY FUSED DISCONNECT (NEMA 3R OUTDOORS) AND SINGLE POINT POWER CONNECTION TO EQUIPMENT (UNLESS NOTED OTHERWISE). IF STARTERS ARE REQUIRED FOR MECHANICAL EQUIPMENT, ADDITIONAL REQUIREMENTS WILL BE INDICATED ON ONE-LINES, PLAN DRAWINGS, AND MECHANICAL PLANS.

CONTROLS: INSTALL 3/4" CONDUIT (UNLESS NOTED OTHERWISE) FROM HVAC CONTROLS (T-STAT OR OTHER*) TO UNIT. CONTROL WIRING WILL BE INSTALLED BY OTHERS. COORDINATE WITH MECHANICAL CONTRACTOR.
* THIS INCLUDES OTHER EQUIPMENT OR DEVICES WHICH ARE INTERLOCKED WITH THE MECHANICAL UNIT AND INDICATED ON THE MECHANICAL PLANS. COORDINATE RACEWAY REQUIREMENTS WITH MECHANICAL PLANS AND THE MECHANICAL CONTRACTOR.

SMOKE DETECTION: WHEN THE DUCT MOUNTED SMOKE DETECTORS ARE INDICATED, PROVIDE SHUTDOWN WIRING FROM DETECTOR (PROVIDED BY MECHANICAL UNLESS NOTED OTHERWISE) TO HVAC UNIT AND VISIBLE/AUDIBLE SIGNALS IN ACCORDANCE WITH IMC SECTION 606. WHEN A FIRE ALARM SYSTEM IS PRESENT, THE DETECTOR SHALL ALSO BE CONNECTED TO THE FIRE ALARM CONTROL PANEL. PROVIDE 120V BRANCH CIRCUIT FOR DETECTOR POWER (2#12, #12G) WHEN REQUIRED. A DEDICATED BRANCH CIRCUIT WITH "LOCK-ON" TAB WILL BE AVAILABLE IN PANEL SCHEDULE FOR THIS PURPOSE IF NECESSARY.

I. VERIFY THE LOCATION OF FIRE RATED WALLS WITH ARCHITECTURAL DRAWINGS TO DETERMINE APPLICABLE CONDUIT PENETRATION DETAILS.

J. CONTRACTOR SHALL IDENTIFY EACH INDIVIDUAL BRANCH CIRCUIT WITHIN THE PROJECT AREA BY PERMANENT MEANS. ACCEPTABLE METHODS INCLUDE USING PERMANENT MARKER ON JUNCTION BOX COVER PLATES AND BACKSIDE OF DEVICE COVER PLATES OR IDENTIFYING BRANCH WIRING WITHIN JUNCTION BOXES. STICK ON LABELS ARE NOT ACCEPTABLE. [REFERENCE ART. 408.4]

K. CONCEAL CONDUITS IN ALL AREAS (EXCEPTION: ELECTRICAL, MECHANICAL, AND JANITOR ROOMS) INSIDE MASONRY WALLS.

MOUNTING OF ALL ELECTRICAL WORK/CONDUIT FOR CEILING SHALL RUN IN DECK FLUTES AND/OR TIGHT WITH DECK AS DIRECTED BY ARCHITECT. CONTRACTOR MAY RUN CONDUIT UNDER FLOOR AS NECESSARY TO FACILITATE CONCEALMENT OF CONDUITS.

NEC ART. 300.4(E) CABLES, RACEWAYS, OR BOXES INSTALLED IN OR UNDER ROOF DECKING. A CABLE, RACEWAY, OR BOX, INSTALLED IN EXPOSED OR CONCEALED LOCATIONS UNDER METAL-CORRUGATED SHEET ROOF DECKING, SHALL BE INSTALLED AND SUPPORTED SO THERE IS NOT LESS THAN 38 MM (1½ IN.) MEASURED FROM THE LOWEST SURFACE OF THE ROOF DECKING TO THE TOP OF THE CABLE, RACEWAY, OR BOX. A CABLE, RACEWAY, OR BOX SHALL NOT BE INSTALLED IN CONCEALED LOCATIONS IN METAL-CORRUGATED, SHEET DECKING-TYPE ROOF.

EXCEPTION: RIGID METAL CONDUIT AND INTERMEDIATE METAL CONDUIT SHALL NOT BE REQUIRED TO COMPLY WITH THESE REQUIREMENTS.

REVISIONS	BY
1 3/7/14	WB
2 4/15/14	WB

VoltaUS CONSULTING
3898 N. Miller Road, Suite 101, Scottsdale, AZ 85251
Tel: (480) 659-0511, VoltaUS.com

The drawings and specifications contained herein are the property of VoltaUS Consulting and shall not be reproduced in whole or in part without our written permission. Any revisions to these drawings or specifications must be approved by VoltaUS Consulting. Reproducible copies of these drawings and specifications will be furnished to the owner upon request and payment of a fee to cover reproduction and handling costs.

JOEL WESTERVELT ARCHITECT
93 ARNOLD STREET
CAMP VERDE, ARIZONA 86322
www.joelwesterveltarchitect.com
928-567-2255

04/15/14

Registered Professional Engineer (Electrical) CERTIFICATE NO. 30536 WILLIAM J. BETHAM, IV DATE SIGNED 04/15/14 ARIZONA U.S.A.

SEAL: EXPIRES:09/30/14

CAMP VERDE COMMUNITY LIBRARY
BLACK BRIDGE ROAD
CAMP VERDE, ARIZONA

Date 08/12/13
Scale AS NOTED
Drawn ETS
Job 302002
Sheet E2.0

P:\13\020\302002\302002.dwg Wed 16 Apr 2014 2:39pm

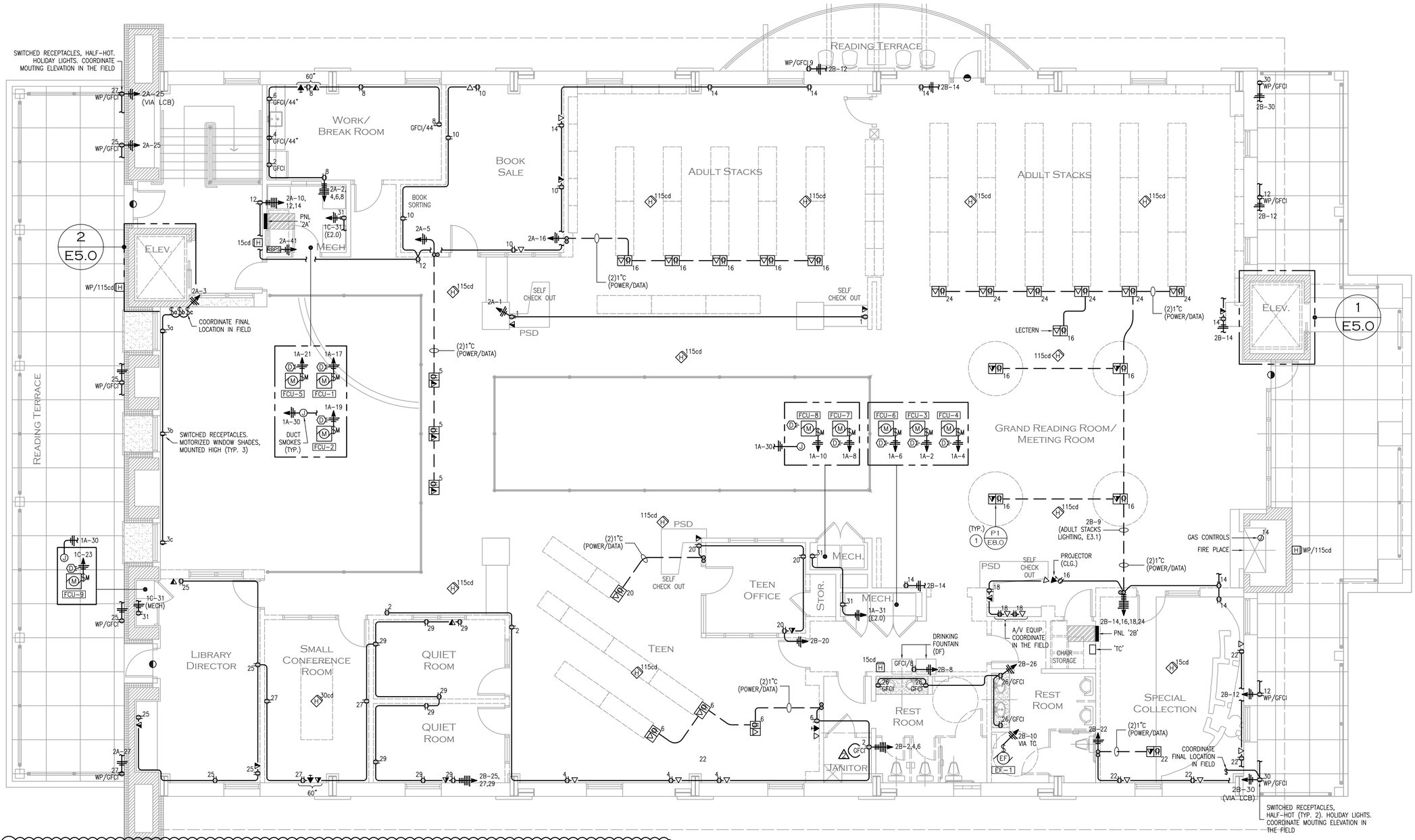

1 UPPER LEVEL - POWER PLAN

SCALE: 3/16" = 1' - 0"

GENERAL NOTES

A. REFER TO ELECTRICAL LEGEND AND SPECIFICATIONS FOR ADDITIONAL REQUIREMENTS INCLUDING, BUT NOT LIMITED TO, CODE REQUIREMENTS, EQUIPMENT AND MATERIAL SPECIFICATIONS AND INSTALLATION REQUIREMENTS, SUBMITTAL REQUIREMENTS, DEVICE MOUNTING HEIGHTS, EQUIPMENT IDENTIFICATION, ETC.

B. COORDINATE ALL CONSTRUCTION WITH OTHER TRADES INCLUDING LOCATION OF MECHANICAL EQUIPMENT AND ROUTING OF PIPING, RACEWAYS, DUCTWORK, ETC.

C. SUPPORT ALL RACEWAYS PER NEC. INSTALL CONDUIT WITH 270 DEGREES IN BENDS MAXIMUM WITHOUT PULL POINT. INSTALL JUNCTION / PULL BOXES AS NECESSARY. WHEN SIZES ARE NOT SPECIFIED, SIZE BOXES BASED ON CONDUIT SIZES / FILL PER NEC.

D. MAINTAIN WORKING CLEARANCE ABOUT ELECTRICAL EQUIPMENT PER NEC ART. 110.

E. CONDUIT AND WIRE IS SHOWN DIAGRAMMATICALLY. ACTUAL ROUTING AND REQUIRED NUMBER OF SUPPORTS SHALL BE DETERMINED BY THE CONTRACTOR.

F. WHERE TELEPHONE, DATA, OR SECURITY DEVICES ARE SHOWN, INSTALL OUTLET BOX AND CONDUIT (3/4" UNLESS NOTED OTHERWISE) ABOVE THE CEILING.

G. VERIFY ALL EQUIPMENT LOCATIONS AND DIMENSIONS IN THE FIELD PRIOR TO INSTALLING RACEWAYS AND WIRING.

GENERAL NOTES

H. HVAC EQUIPMENT

DISCONNECTING MEANS: PROVIDE AND INSTALL HEAVY DUTY FUSED DISCONNECT (NEMA 3R OUTDOORS) AND SINGLE POINT POWER CONNECTION TO EQUIPMENT (UNLESS NOTED OTHERWISE). IF STARTERS ARE REQUIRED FOR MECHANICAL EQUIPMENT, ADDITIONAL REQUIREMENTS WILL BE INDICATED ON ONE-LINES, PLAN DRAWINGS, AND MECHANICAL PLANS.

CONTROLS: INSTALL 3/4" CONDUIT (UNLESS NOTED OTHERWISE) FROM HVAC CONTROLS (T-STAT OR OTHER*) TO UNIT. CONTROL WIRING WILL BE INSTALLED BY OTHERS. COORDINATE WITH MECHANICAL CONTRACTOR.
* THIS INCLUDES OTHER EQUIPMENT OR DEVICES WHICH ARE INTERLOCKED WITH THE MECHANICAL UNIT AND INDICATED ON THE MECHANICAL PLANS. COORDINATE RACEWAY REQUIREMENTS WITH MECHANICAL PLANS AND THE MECHANICAL CONTRACTOR.

SMOKE DETECTION: WHEN THE DUCT MOUNTED SMOKE DETECTORS ARE INDICATED, PROVIDE SHUTDOWN WIRING FROM DETECTOR (PROVIDED BY MECHANICAL UNLESS NOTED OTHERWISE) TO HVAC UNIT AND VISIBLE/AUDIBLE SIGNALS IN ACCORDANCE WITH IMC SECTION 606. WHEN A FIRE ALARM SYSTEM IS PRESENT, THE DETECTOR SHALL ALSO BE CONNECTED TO THE FIRE ALARM CONTROL PANEL. PROVIDE 120V BRANCH CIRCUIT FOR DETECTOR POWER (2#12, #12G) WHEN REQUIRED. A DEDICATED BRANCH CIRCUIT WITH "LOCK-ON" TAB WILL BE AVAILABLE IN PANEL SCHEDULE FOR THIS PURPOSE IF NECESSARY.

I. VERIFY THE LOCATION OF FIRE RATED WALLS WITH ARCHITECTURAL DRAWINGS TO DETERMINE APPLICABLE CONDUIT PENETRATION DETAILS.

J. CONTRACTOR SHALL IDENTIFY EACH INDIVIDUAL BRANCH CIRCUIT WITHIN THE PROJECT AREA BY PERMANENT MEANS. ACCEPTABLE METHODS INCLUDE USING PERMANENT MARKER ON JUNCTION BOX COVER PLATES AND BACKSIDE OF DEVICE COVER PLATES OR IDENTIFYING BRANCH WIRING WITHIN JUNCTION BOXES. STICK ON LABELS ARE NOT ACCEPTABLE. [REFERENCE ART. 408.4]

KEYED NOTES

1. COORDINATE THE EXACT PLACEMENT OF ALL FLOOR BOXES IN THE FIELD. USE DIMENSIONED PLANS BY ARCHITECT WHEN PROVIDED.

GENERAL NOTES

K. CONCEAL CONDUITS IN ALL AREAS (EXCEPTION: ELECTRICAL, MECHANICAL, AND JANITOR ROOMS) INSIDE MASONRY WALLS.

MOUNTING OF ALL ELECTRICAL WORK/CONDUIT FOR CEILING SHALL RUN IN DECK FLUTES AND/OR TIGHT WITH DECK AS DIRECTED BY ARCHITECT. CONTRACTOR MAY RUN CONDUIT UNDER FLOOR AS NECESSARY TO FACILITATE CONCEALMENT OF CONDUITS.

NEC ART. 300.4(E) CABLES, RACEWAYS, OR BOXES INSTALLED IN OR UNDER ROOF DECKING. A CABLE, RACEWAY, OR BOX, INSTALLED IN EXPOSED OR CONCEALED LOCATIONS UNDER METAL-CORRUGATED SHEET ROOF DECKING, SHALL BE INSTALLED AND SUPPORTED SO THERE IS NOT LESS THAN 38 MM (1½ IN.) MEASURED FROM THE LOWEST SURFACE OF THE ROOF DECKING TO THE TOP OF THE CABLE, RACEWAY, OR BOX. A CABLE, RACEWAY, OR BOX SHALL NOT BE INSTALLED IN CONCEALED LOCATIONS IN METAL-CORRUGATED, SHEET DECKING-TYPE ROOF.

EXCEPTION: RIGID METAL CONDUIT AND INTERMEDIATE METAL CONDUIT SHALL NOT BE REQUIRED TO COMPLY WITH THESE REQUIREMENTS.

REVISIONS	BY
1 3/7/14	WB
2 4/15/14	WB

VoltaUS CONSULTING
3898 N. Miller Road, Suite 101, Scottsdale, AZ 85251
Tel: (480) 659-0511, VoltaUS.com

The drawings, specifications, and other documents prepared by Volta US Consulting for this project are instruments of service for use solely with respect to this project. They are not to be used by the owner or others on other projects, for additions to this project, or for completion of this project by others, except by agreement in writing and with appropriate compensation to Volta US Consulting, the author of these documents. All reports, plans, specifications, bulletins, and other documents, or copies thereof, furnished by Volta US Consulting are to be returned upon demand and will not be used by the owner or others for any purpose except as agreed to by Volta US Consulting and the owner. These documents are not to be loaned, copied, or given to other persons or entities without the express written consent of Volta US Consulting.

JOEL WESTERVELT ARCHITECT
93 ARNOLD STREET
CAMP VERDE, ARIZONA 86322
www.joelwesterveltarchitect.com
928-567-2355

04/15/14

Registered Professional Engineer (Electrical) CERTIFICATE NO. 30536 WILLIAM J. BETHAUM, IV DATE SIGNED 04/15/14 ARIZONA U.S.A.

SEAL: EXPIRES:09/30/14

CAMP VERDE COMMUNITY LIBRARY
BLACK BRIDGE ROAD
CAMP VERDE, ARIZONA

Date	08/12/13
Scale	AS NOTED
Drawn	ETS
Job	302002
Sheet	E2.1

P:\13\020\302002\302002.dwg Wed 16 Apr 2014 2:45pm

GENERAL NOTES

A. GENERAL REQUIREMENTS:

- FLUORESCENT FIXTURES UTILIZING DOUBLE-ENDED LAMPS SHALL HAVE INTEGRAL DISCONNECTING MEANS PER NEC ART. 410.130(G)

B. PROVIDE SUBMITTALS FOR ALL LIGHT FIXTURES. ALL FIXTURES SHALL BE UL LISTED. FIXTURES SHALL BE LISTED FOR "WET LOCATIONS" WHEN REQUIRED.

C. COORDINATE THE PURCHASE AND INSTALLATION OF ALL FIXTURES WITH CEILING CONSTRUCTION. WHEN CEILING GRIDS ARE INSTALLED, VERIFY THAT FIXTURES TO BE INSTALLED ARE COMPATIBLE WITH GRID TYPE AND DIMENSIONS.

D. EMERGENCY AND EXIT SIGNS SHALL BE CONNECTED TO A NON-SWITCHED LEG OF THE NEAREST BRANCH LIGHTING CIRCUIT, 2#12, 1#12G UNLESS NOTED OTHERWISE. REFER TO LEGEND FOR EMERGENCY LIGHT FIXTURE SYMBOLS.

E. FIXTURES DESIGNATED AS NIGHT LIGHTS SHALL BE SUPPLIED FROM A NON-SWITCHED LEG OF THE BRANCH LIGHTING CIRCUIT FOR ONE BALLAST OF EACH NIGHT LIGHT FIXTURE. IN MANY CASES, EMERGENCY FIXTURES WILL BE DESIGNATED AS NIGHT LIGHTS FOR CONVENIENCE.

GENERAL NOTES

F. IN GENERAL, NON-SWITCHED LEGS FOR NIGHT LIGHTS AND EMERGENCY LIGHTS AND TRAVELLER CONDUCTORS FOR 3-WAY SWITCHING ARE NOT SHOWN ON THE PLANS. INSTALL THESE CONDUCTORS AS REQUIRED FOR PROPER OPERATION OF THE LIGHT FIXTURES.

G. INSTALL FLEXIBLE CONDUIT CONNECTIONS TO FIXTURES (NOT TO EXCEED 6' IN LENGTH) WHEN NECESSARY.

H. WHEN MANUAL OVERRIDE SWITCHES ARE SHOWN, INSTALL THE CONTROL WIRING FROM THE SWITCH TO THE LIGHTING CONTROLLER.

GENERAL NOTES

I. CONCEAL CONDUITS IN ALL AREAS (EXCEPTION: ELECTRICAL, MECHANICAL, AND JANITOR ROOMS) INSIDE MASONRY WALLS.

MOUNTING OF ALL ELECTRICAL WORK/CONDUIT FOR CEILING SHALL RUN IN DECK FLUTES AND/OR TIGHT WITH DECK AS DIRECTED BY ARCHITECT. CONTRACTOR MAY RUN CONDUIT UNDER FLOOR AS NECESSARY TO FACILITATE CONCEALMENT OF CONDUITS.

NEC ART. 300.4(E) CABLES, RACEWAYS, OR BOXES INSTALLED IN OR UNDER ROOF DECKING. A CABLE, RACEWAY, OR BOX, INSTALLED IN EXPOSED OR CONCEALED LOCATIONS UNDER METAL-CORRUGATED SHEET ROOF DECKING, SHALL BE INSTALLED AND SUPPORTED SO THERE IS NOT LESS THAN 38 MM (1½ IN.) MEASURED FROM THE LOWEST SURFACE OF THE ROOF DECKING TO THE TOP OF THE CABLE, RACEWAY, OR BOX. A CABLE, RACEWAY, OR BOX SHALL NOT BE INSTALLED IN CONCEALED LOCATIONS IN METAL-CORRUGATED, SHEET DECKING-TYPE ROOF.

EXCEPTION: RIGID METAL CONDUIT AND INTERMEDIATE METAL CONDUIT SHALL NOT BE REQUIRED TO COMPLY WITH THESE REQUIREMENTS.

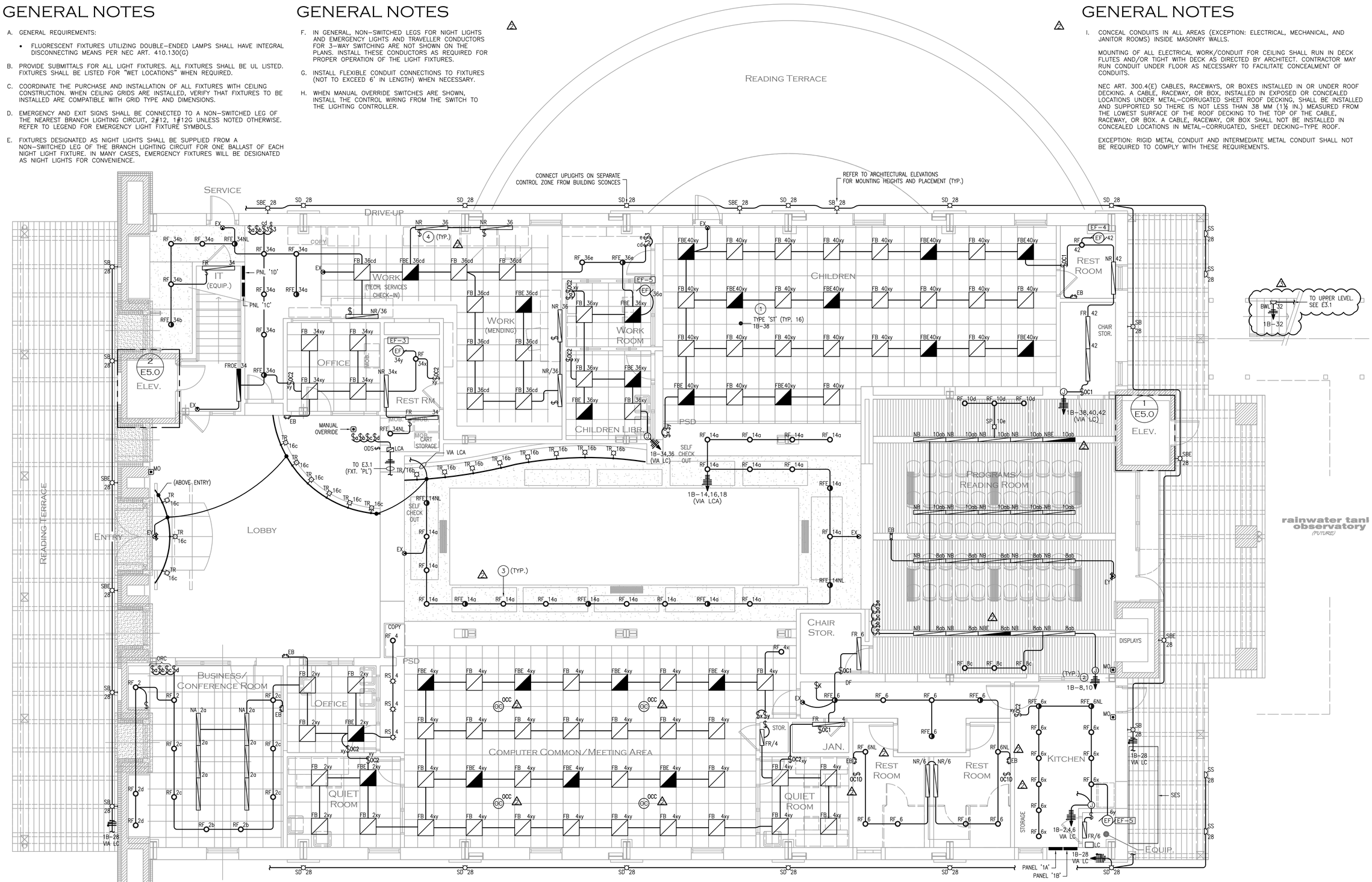

KEYED NOTES

1. STACK LIGHTING (TYPE ST), TYPICAL THIS AREA, FED FROM CONDUIT STUB-UP & JUNCTION BOX AT EACH ROW, QUANTITY AS INDICATED. ROUTE CONDUIT THROUGH FURNISHINGS TO STACK LIGHTING AS COORDINATED WITH OWNERS FURNISHING SELECTION.

2. ROUTE ALL BRANCH LIGHTING CIRCUITS THROUGH LIGHTING CONTROLLER UNLESS NOTED OTHERWISE.

KEYED NOTES

3. COMMON AREAS SHALL BE CONTROLLED VIA LIGHTING CONTROLLER ON A TIME OF DAY BASIS WITH A LOCAL KEYED SWITCH FOR OVERRIDE.

4. INSTALL WALL MOUNTED SWITCH FOR EACH WORKSTATION.

1 MAIN LEVEL - LIGHTING PLAN

SCALE: 3/16" = 1' - 0"

REVISIONS	BY
1 3/7/14	WB
2 4/15/14	WB
3 10/6/14	WB

VoltaUS CONSULTING
3686 N. Miller Road, Suite 101, Scottsdale, AZ 85251
Tel: (480) 659-0511, VoltaUS.com

"No reproduction or distribution of this design, in whole or in part, without the express written permission of VoltaUS CONSULTING is prohibited. This design is transmitted to the recipient for use in connection with the project described herein. Neither ownership nor any other rights to this design are conveyed by its receipt or possession."

JOEL WESTERVELT ARCHITECT
93 ARNOLD STREET
CAMP VERDE, ARIZONA 86322
www.joelwesterveltarchitect.com
928-567-2355

10/07/14

Registered Professional Engineer (Electrical) CERTIFICATE NO. 30536 WILLIAM J. BETHANEY, IV DATE SIGNED 10/07/14

SEAL: EXPIRES:09/30/17

CAMP VERDE COMMUNITY LIBRARY
BLACK BRIDGE ROAD
CAMP VERDE, ARIZONA

Date	08/12/13
Scale	AS NOTED
Drawn	ETS
Job	302002
Sheet	E3.0

P:\13\020\302002\302002.dwg Tue 07 Oct 2014 5:31pm

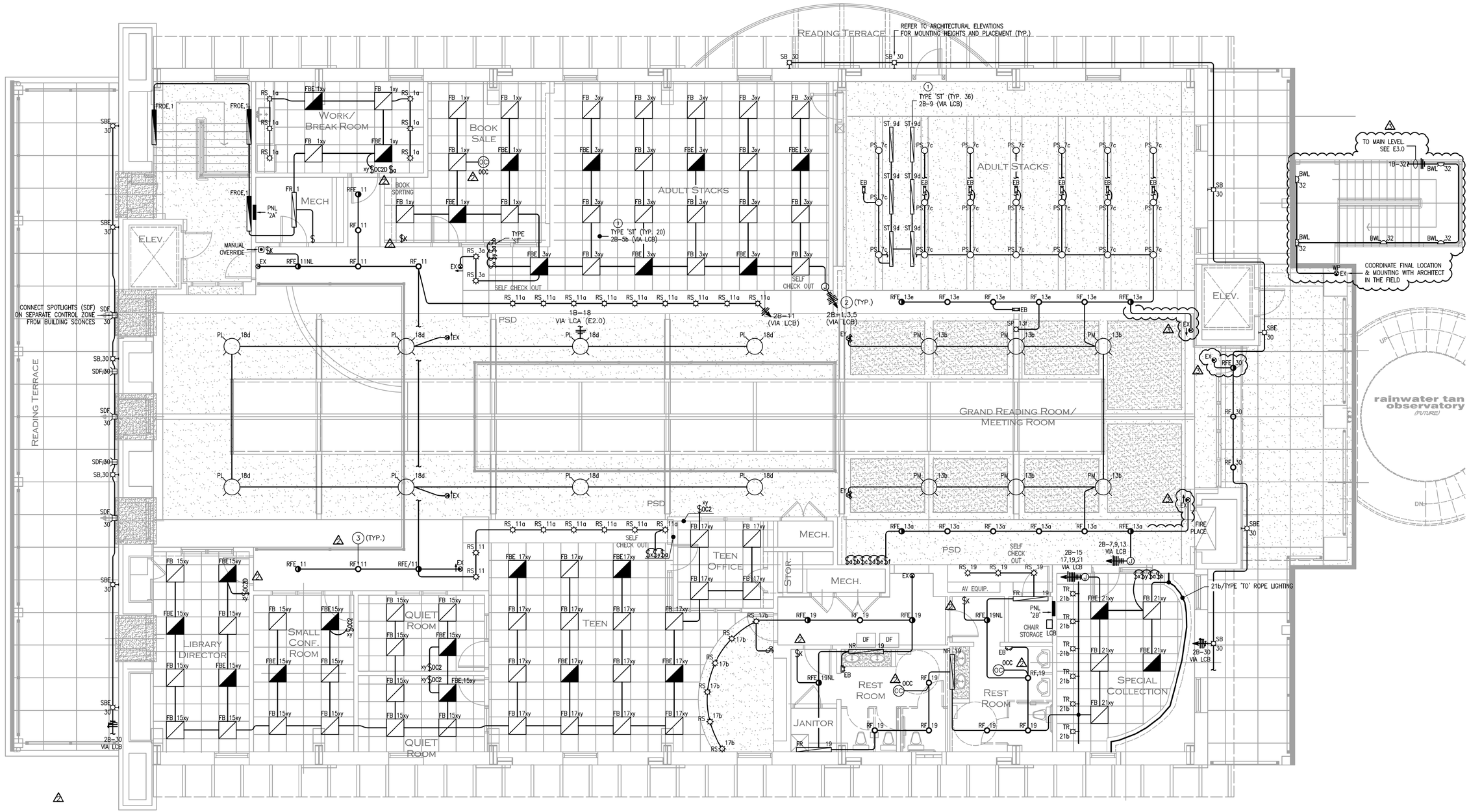

GENERAL NOTES

A. GENERAL REQUIREMENTS:

- FLUORESCENT FIXTURES UTILIZING DOUBLE-ENDED LAMPS SHALL HAVE INTEGRAL DISCONNECTING MEANS PER NEC ART. 410.130(G)

B. PROVIDE SUBMITTALS FOR ALL LIGHT FIXTURES. ALL FIXTURES SHALL BE UL LISTED. FIXTURES SHALL BE LISTED FOR "WET LOCATIONS" WHEN REQUIRED.

C. COORDINATE THE PURCHASE AND INSTALLATION OF ALL FIXTURES WITH CEILING CONSTRUCTION. WHEN CEILING GRIDS ARE INSTALLED, VERIFY THAT FIXTURES TO BE INSTALLED ARE COMPATIBLE WITH GRID TYPE AND DIMENSIONS.

D. EMERGENCY AND EXIT SIGNS SHALL BE CONNECTED TO A NON-SWITCHED LEG OF THE NEAREST BRANCH LIGHTING CIRCUIT, 2#12, 1#12G UNLESS NOTED OTHERWISE. REFER TO LEGEND FOR EMERGENCY LIGHT FIXTURE SYMBOLS.

E. FIXTURES DESIGNATED AS NIGHT LIGHTS SHALL BE SUPPLIED FROM A NON-SWITCHED LEG OF THE BRANCH LIGHTING CIRCUIT FOR ONE BALLAST OF EACH NIGHT LIGHT FIXTURE. IN MANY CASES, EMERGENCY FIXTURES WILL BE DESIGNATED AS NIGHT LIGHTS FOR CONVENIENCE.

F. IN GENERAL, NON-SWITCHED LEGS FOR NIGHT LIGHTS AND EMERGENCY LIGHTS AND TRAVELLER CONDUCTORS FOR 3-WAY SWITCHING ARE NOT SHOWN ON THE PLANS. INSTALL THESE CONDUCTORS AS REQUIRED FOR PROPER OPERATION OF THE LIGHT FIXTURES.

G. INSTALL FLEXIBLE CONDUIT CONNECTIONS TO FIXTURES (NOT TO EXCEED 6' IN LENGTH) WHEN NECESSARY.
BE REQUIRED TO COMPLY WITH THESE REQUIREMENTS.

GENERAL NOTES

H. WHEN MANUAL OVERRIDE SWITCHES ARE SHOWN, INSTALL THE CONTROL WIRING FROM THE SWITCH TO THE LIGHTING CONTROLLER.

I. CONCEAL CONDUITS IN ALL AREAS (EXCEPTION: ELECTRICAL, MECHANICAL, AND JANITOR ROOMS) INSIDE MASONRY WALLS.

MOUNTING OF ALL ELECTRICAL WORK/CONDUIT FOR CEILING SHALL RUN IN DECK FLUTES AND/OR TIGHT WITH DECK AS DIRECTED BY ARCHITECT. CONTRACTOR MAY RUN CONDUIT UNDER FLOOR AS NECESSARY TO FACILITATE CONCEALMENT OF CONDUITS.

NEC ART. 300.4(E) CABLES, RACEWAYS, OR BOXES INSTALLED IN OR UNDER ROOF DECKING. A CABLE, RACEWAY, OR BOX, INSTALLED IN EXPOSED OR CONCEALED LOCATIONS UNDER METAL-CORRUGATED SHEET ROOF DECKING, SHALL BE INSTALLED AND SUPPORTED SO THERE IS NOT LESS THAN 38 MM (1½ IN.) MEASURED FROM THE LOWEST SURFACE OF THE ROOF DECKING TO THE TOP OF THE CABLE, RACEWAY, OR BOX. A CABLE, RACEWAY, OR BOX SHALL NOT BE INSTALLED IN CONCEALED LOCATIONS IN METAL-CORRUGATED, SHEET DECKING-TYPE ROOF.

EXCEPTION: RIGID METAL CONDUIT AND INTERMEDIATE METAL CONDUIT SHALL NOT BE REQUIRED TO COMPLY WITH THESE REQUIREMENTS.

KEYED NOTES

1. STACK LIGHTING (TYPE ST), TYPICAL THIS AREA, FED FROM CONDUIT STUB-UP & JUNCTION BOX AT EACH ROW, QUANTITY AS INDICATED. ROUTE CONDUIT THROUGH FURNISHINGS TO STACK LIGHTING AS COORDINATED WITH OWNERS FURNISHING SELECTION.
2. ROUTE ALL BRANCH LIGHTING CIRCUITS THROUGH LIGHTING CONTROLLER UNLESS NOTED OTHERWISE.
3. COMMON AREAS SHALL BE CONTROLLED VIA LIGHTING CONTROLLER ON A TIME OF DAY BASIS WITH A LOCAL KEYED SWITCH FOR OVERRIDE.

1 UPPER LEVEL - LIGHTING PLAN

SCALE: 3/16" = 1' - 0"

REVISIONS	BY
1 3/7/14	WB
2 4/15/14	WB
3 10/7/14	WB

VoltaUS CONSULTING
3686 N. Miller Road, Suite 101, Scottsdale, AZ 85251
Tel: (480) 659-0511, VoltaUS.com

The drawings and specifications contained herein are the property of VoltaUS Consulting and shall not be reproduced in whole or in part without the written permission of VoltaUS Consulting.

JOEL WESTERVELT ARCHITECT
93 ARNOLD STREET
CAMP VERDE, ARIZONA 86322
www.joelwesterveltarchitect.com
928-567-2255

10/07/14

Registered Professional Engineer (Electrical) CERTIFICATE NO. 30536 WILLIAM J. BETHANDAL, IV DATE SIGNED 10/07/14

SEAL: EXPIRES:09/30/17

CAMP VERDE COMMUNITY LIBRARY
BLACK BRIDGE ROAD
CAMP VERDE, ARIZONA

Date	08/12/13
Scale	AS NOTED
Drawn	ETS
Job	302002
Sheet	E3.1

P:\13\020\302002\302002.dwg Wed 08 Oct 2014 7:18am

P:\13\020\302002\302002.dwg Wed 16 Apr 2014 2:42pm

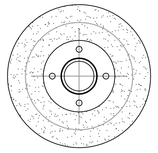

PLAN A–A

NOTE: ORIENT BOLT PATTERN AS SHOWN ON PLANS. CONFIRM BOLT PATTERN WITH POLE MANUFACTURER PRIOR TO INSTALLATION.

KEYED NOTES

A. UNLESS PROVIDED IN STRUCTURAL PLANS, POLE BASE DIMENSION & REINFORCEMENT SHALL BE PROVIDED BY POLE SUPPLIER AND SEALED BY STRUCTURAL ENGINEER REGISTERED IN THE SAME STATE AS PROJECT. MAINTAIN NET POLE HEIGHT PER FIXTURE SCHEDULE WHEN POLE BASE EXTENDS ABOVE GRADE. ESTIMATE 5'–0" FOR BIDDING PURPOSES.

B. 2'–6".

C. 5/8"x8'–0" GROUND ROD (OR #4 BARE CU X 20' UFER IN BASE). CADWELD TO REBAR AND ANCHOR BOLT WITH #4 BARE COPPER.

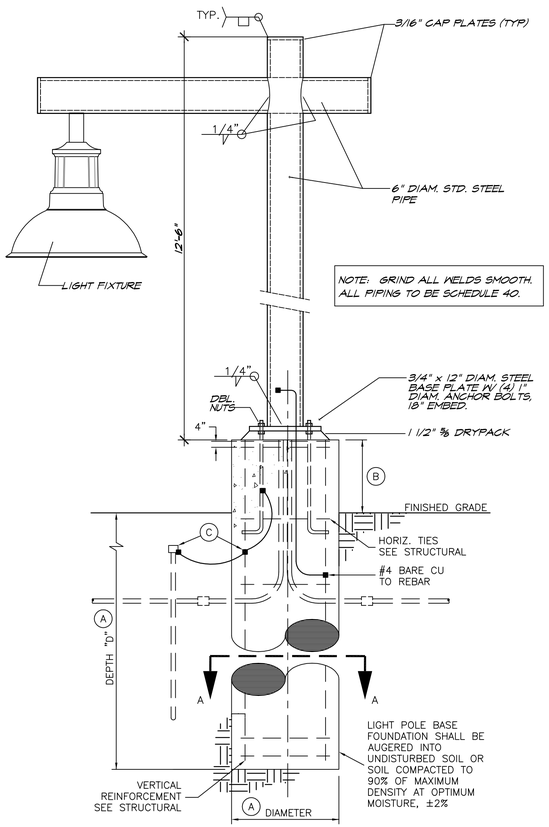

L2 POLE FOUNDATION

NO SCALE

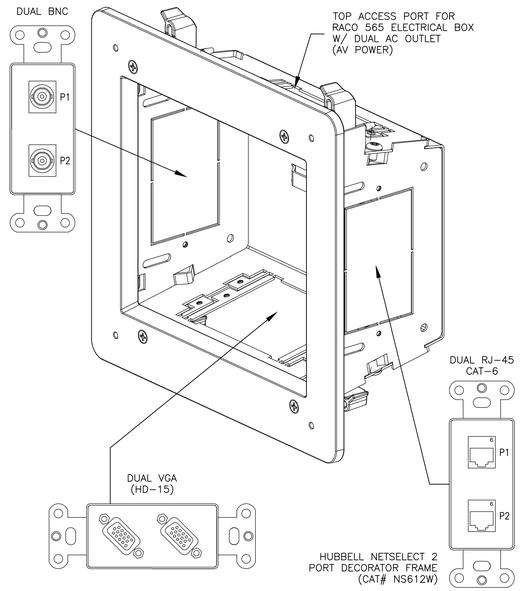

A3 FLAT PANEL TV WALL BOX W/ DUAL JACK MODULES & 120VAC

NO SCALE

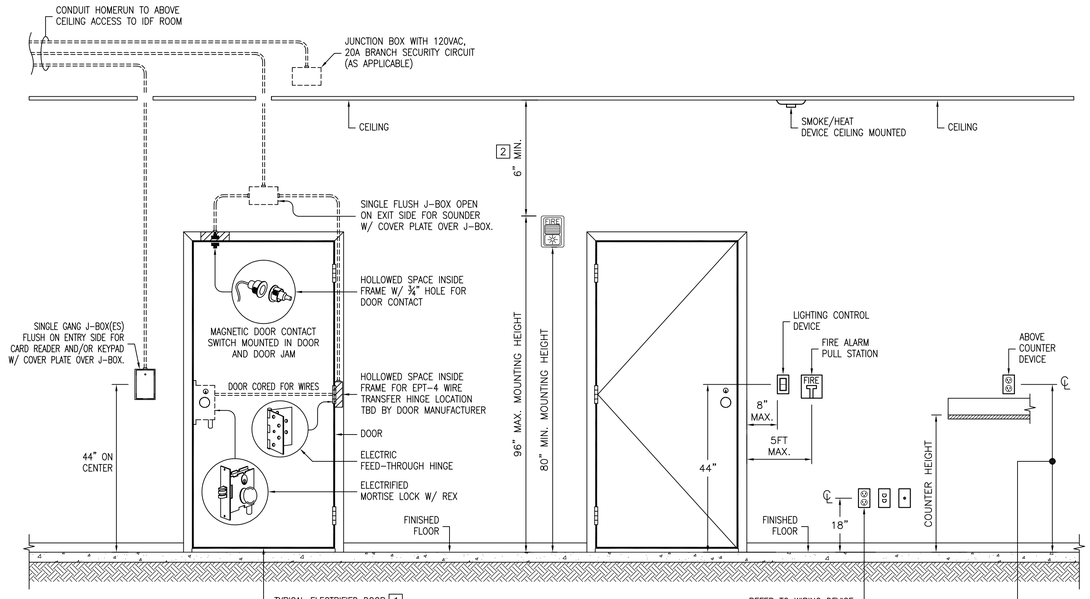

1 DETAIL REPRESENTS TYPICAL INSTALLATION. THE ACTUAL NUMBER OF CONNECTION, POWER REQUIREMENTS, WIRING REQUIREMENTS WILL VARY. COORDINATE WITH ACCESS CONTROLS INSTALLER AND SHOP DRAWINGS ACCORDINGLY.

2 INSTALL NOTIFICATION DEVICES AT 80"AFF (82" TO DEVICE BOX CENTERLINE) UNLESS NOTED OTHERWISE OR UNLESS MINIMUM CEILING SPACING CANNOT BE MAINTAINED. (REF. NFPA 72)

A2 ELECTRIFIED DOOR

NO SCALE

A1 DEVICE MOUNTING HEIGHTS

NO SCALE

A. (1) 1"C., FOR POWER (CONDUCTORS AS NOTED), (1) 1"C. WITH PULL STRING FOR DATA UNDER SLAB. POWER CONDUIT MAY BE ROUTED TO SOURCE. ROUTE DATA CONDUIT TO NEAREST ACCESSIBLE SPACE.

B. FOR MODULAR FURNITURE CONNECTION OPTION, PROVIDE COVER PLATE (1–1/4" TYP) AND FLEX CONNECTIONS FOR POWER AND DATA. CONDUIT FILL AND CIRCUIT CONFIGURATION MAY REQUIRE MODIFICATION.

C. TWO COMPARTMENT (T&B 66A–SC) OR FOUR COMPARTMENT (T&B 665–SC), OR APPROVED EQUAL.

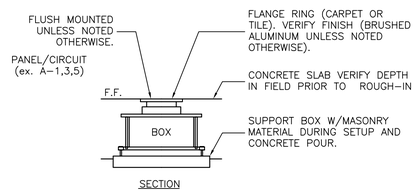

SECTION

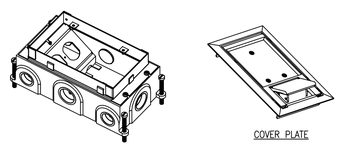

COVER PLATE

P1 IN-FLOOR DEVICES

NO SCALE

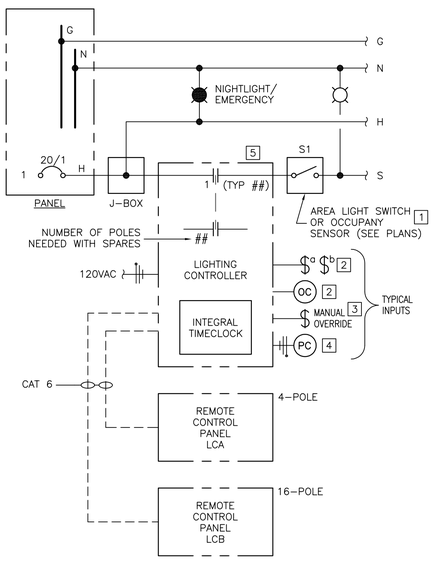

KEYED NOTES

1. LOCAL CONTROLS WHEN INSTALLED WILL BE OVERRIDDEN BY LIGHTING CONTROLLER FOR AUTO SHUTOFF BASED ON TIME SETTINGS AS DIRECTED BY OWNER.
2. LOW VOLTAGE SWITCHES AND/OR OCCUPANCY SENSORS WHEN INDICATED ON PLANS FOR LOCAL CONTROL.
3. LOW VOLTAGE MANUAL OVERRIDE SWITCH PROGRAMMED FOR 2HR MAXIMUM OVERRIDE OF LIGHTING CONTROL PANEL.
4. PHOTOCELL WHEN INDICATED ON PLANS FOR CONTROL BASED ON EXTERIOR LIGHT LEVELS.
5. 480V AND 208V SINGLE PHASE LIGHTING LOADS WILL UTILIZE (2) CONTACTS.

L1 CONTROL PANEL DIAGRAM

NO SCALE

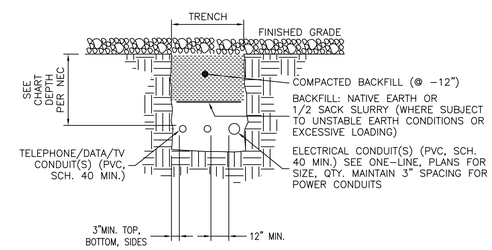

MINIMUM DEPTH (TABLE 300.5)		
TAG	LOCATIONS	DEPTH
A	ALL LOCATIONS NOT SPECIFIED.	18"
B	UNDER 4" THICK (MIN) CONCRETE WITH NO VEHICULAR TRAFFIC.	4"
C	UNDER STREETS, HIGHWAYS, ROADS, ALLEYS, DRIVEWAYS AND PARKING LOTS.	24"

U1 UNDERGROUND CONDUIT

NO SCALE

REVISIONS	BY
1 3/7/14	WB

VoltaUS CONSULTING
3898 N. Miller Road, Suite 101, Scottsdale, AZ 85251
Tel: (480) 659-0511, VoltaUS.com

The Drawings, specifications, and other documents prepared by Volta US Consulting for this project are instruments of service for use solely with respect to this project. All reports, plans, specifications, bulletins, and other documents are to be used only with respect to this project and are not to be used otherwise. These documents are not to be altered in any way without written consent of Volta US Consulting. All rights including copyrights are reserved by Volta US Consulting.

JOEL WESTERVELT ARCHITECT
93 ARNOLD STREET
CAMP VERDE, ARIZONA 86322
www.joelwestervelt architect.com
928-567-2255

04/15/14

Registered Professional Engineer (Electrical) CERTIFICATE NO. 30536 WILLIAM J. BETHURUM, IV DATE SIGNED 04/15/14 ARIZONA U.S.A.

SEAL: EXPIRES:09/30/14

CAMP VERDE COMMUNITY LIBRARY
BLACK BRIDGE ROAD
CAMP VERDE, ARIZONA

Date 08/12/13

Scale AS NOTED

Drawn ETS

Job 302002

Sheet E8.0

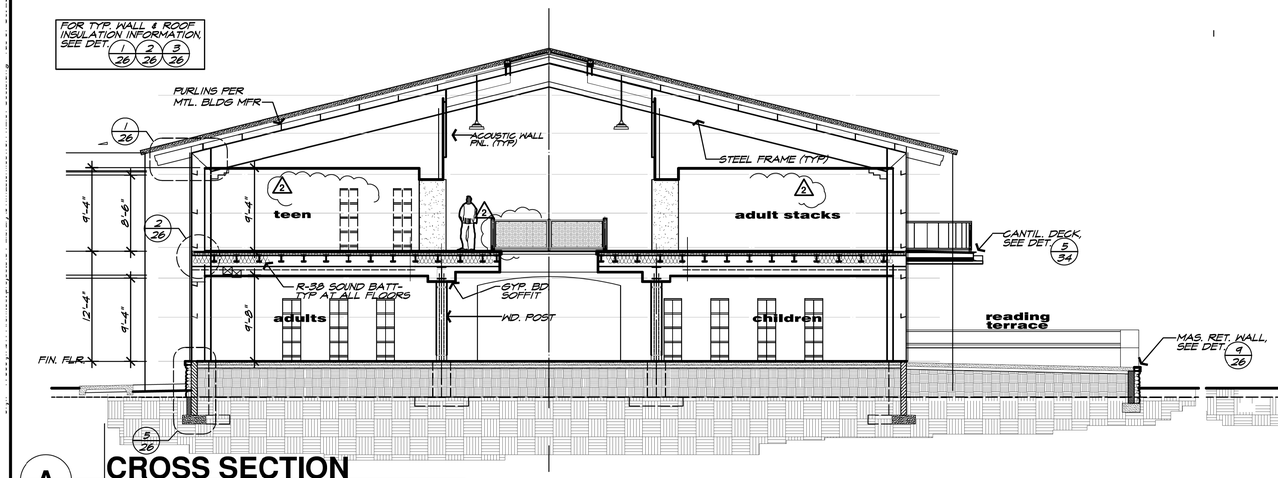

A CROSS SECTION
1/8" = 1'-0"

B CROSS SECTION
1/8" = 1'-0"

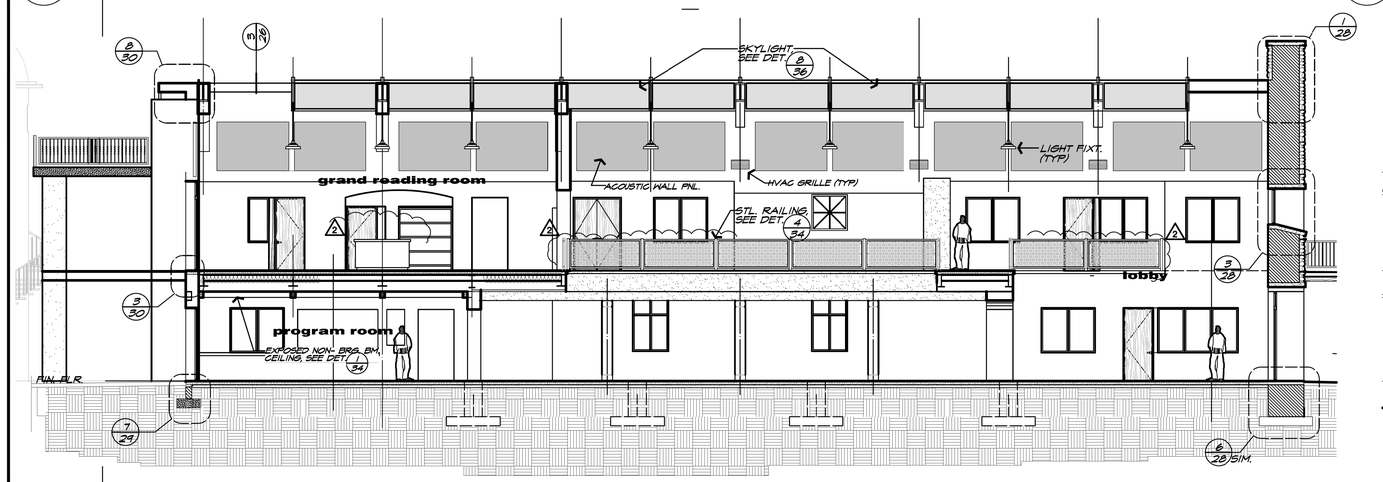

C LONGITUDINAL SECTION
1/8" = 1'-0"

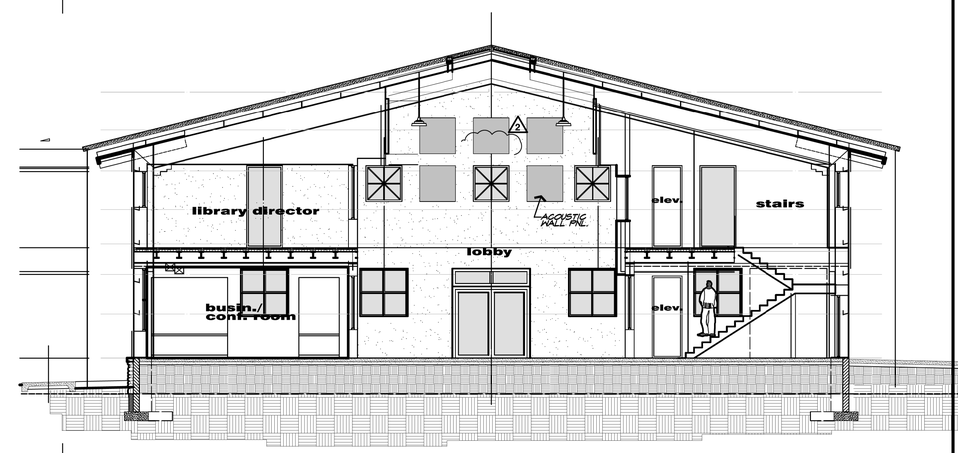

D CROSS SECTION
1/8" = 1'-0"

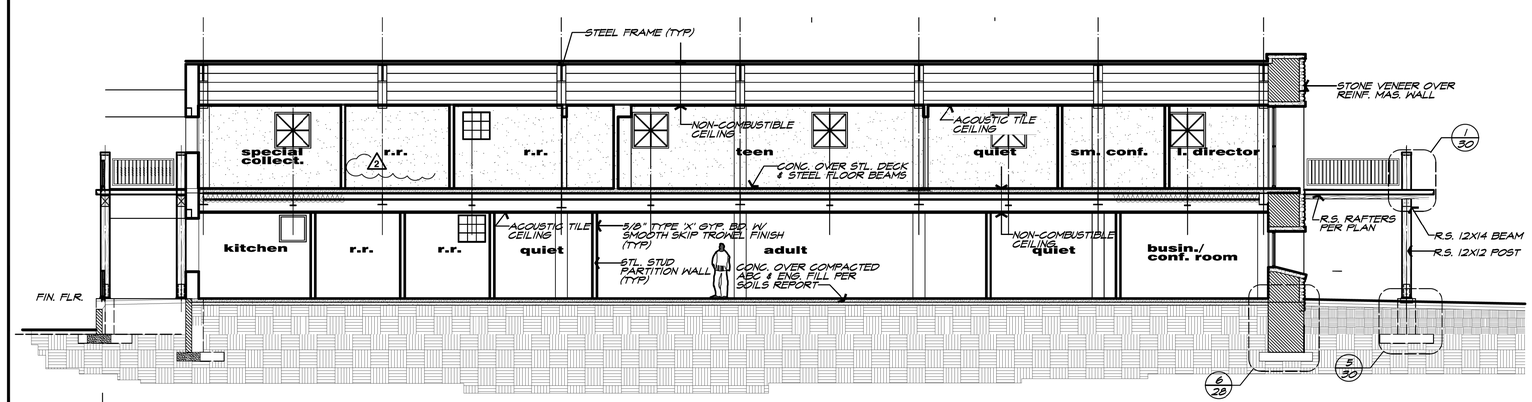

E LONGITUDINAL SECTION
1/8" = 1'-0"

REVISIONS	BY
1 3-7-2014	JW
2 10-3-2014	JW

JOEL WESTERVELT ARCHITECT
93 ARNOLD STREET
CAMP VERDE, ARIZONA 86322
www.joelwesterveltarchitect.com
928-567-2255

REGISTERED ARCHITECT 45322 JOEL WESTERVELT ARIZONA U.S.A. 10/31/13 EXP. 9/30/14

CAMP VERDE COMMUNITY LIBRARY
BLACK BRIDGE ROAD
CAMP VERDE, ARIZONA

Date	10-31-2013
Scale	
Drawn	
Job	
Sheet	11