Town of Camp Verde
Finnie Flat Channel Improvements

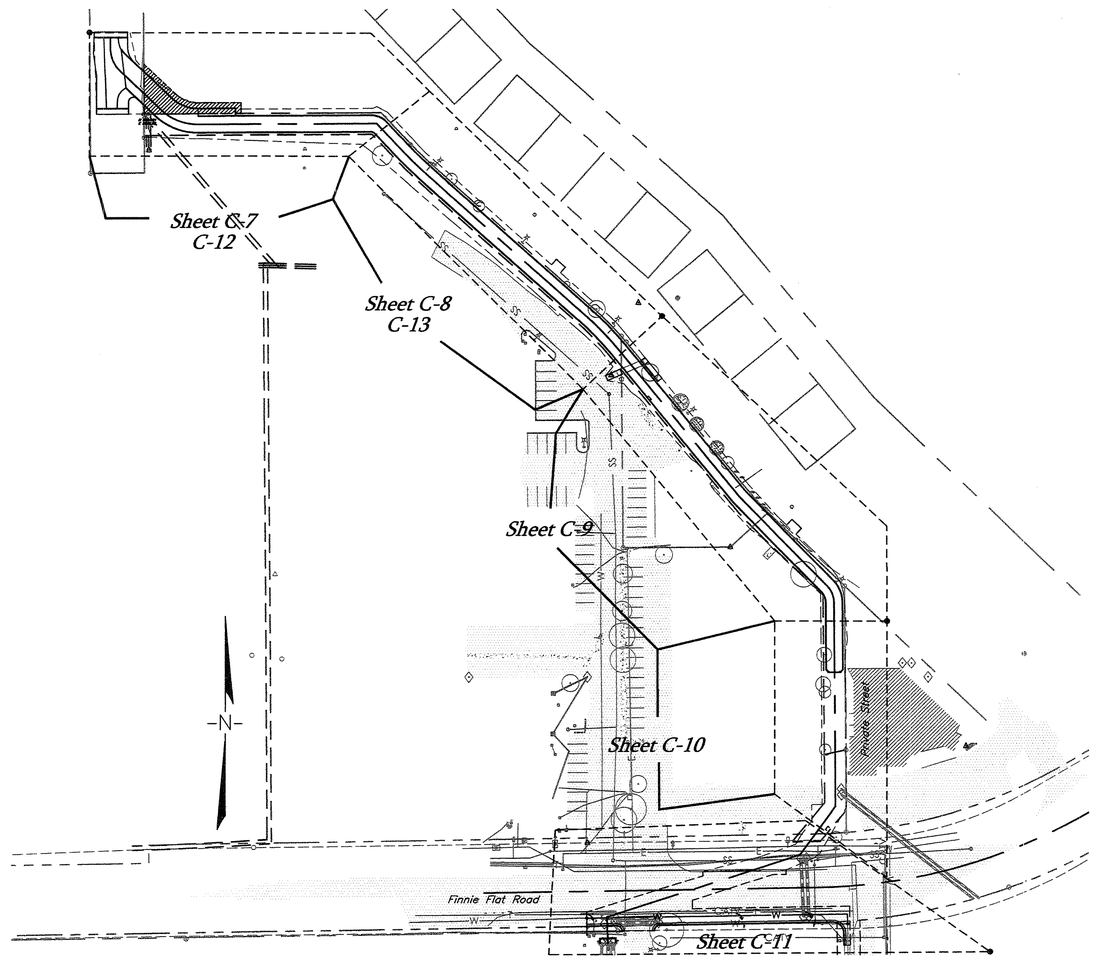

Sheet Index
Not To Scale

Town Of Camp Verde Approvals

Concept Approval Note:
The Town approves these plans for concept only. All liability for errors or omissions is the responsibility of the design engineer.

Town Manager — Date

Public Works Director — Date

UTILITY Acknowledgments

Letter from Robert Witte	Approved with Conditions Phone (928) 300-1001	12-7-09
Arizona Public Service	Contractor shall locate and expose all utilities prior to construction. Coordinate inspection and verify with APS	Date
Letter from Morette Fanning	– Approved as Submitted	11-04-09
Unisource Energy Services		Date
Letter from Rick Ogg	– Approved with the following conditions	3-11-10
Qwest Communications	Contractor to coordinate with Qwest for telephone line relocation.	Date
Letter from Louis Lambros	– Approved with the following conditions:	11-20-09
NPG Cable	NPG maintains cable lines in this vicinity Underground and aerial. Please refer to AZ Blue Stake.	Date
Letter from Jan Grogan	– Approved as Submitted	4-6-10
Camp Verde Sanitary District		Date

Coordinate Waterline Installation with Rick Tackett (928) 567-5281
Camp Verde Water Company

Sheet Index

Cover Sheet	C1
Notes/Quantities/Legend	C2
Details	C3–C5
Horizontal Control	C6
Option 1 ~~Add Alt~~: Rectangular Concrete Channel Station 100+00 – 103+00	C7
Option 1 ~~Add Alt~~/Base Bid: Rectangular Concrete Channel Station 103+00 – 106+00	C8
Base Bid: Rectangular Concrete Channel Station 106+00 – 109+25	C9
Base Bid: Rectangular Concrete Channel Station 109+25 – 111+25	C10
Base Bid: Box Culvert Station 111+25 – End	C11
Option 2 ~~Base Bid~~ Trapezoid Shotcrete Channel Station 100+00 – 104+50	C12–C13
~~Concrete Retaining Wall~~ Structural Plans	S1–S2
SWPPP	P1–P2

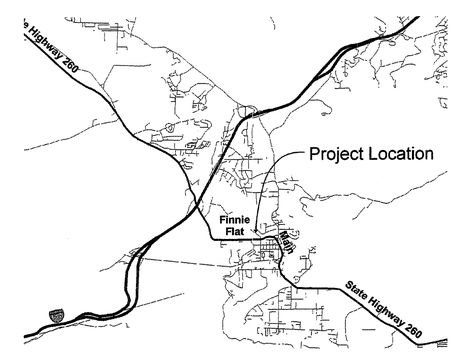

Vicinity Map
Not To Scale

CALL TWO WORKING DAYS BEFORE YOU DIG
263-1000 OR
1-800-STAKE-IT
(OUTSIDE MARICOPA COUNTY)

Revisions	Date:	By:
Sheet Index	1/17/12	RL

G:\86\13045\CAD-GIS\CV\03\VB\CV C03 - C3D\86-13045-BASE.dwg, 6/29/2011 4:24:37 PM

ARIZONA ENGINEERING
CLIENTS | PEOPLE | PERFORMANCE
GHD
1501 South Yale Street·Suite 101·Flagstaff·AZ·USA·1·928·774·7179·www.ghd.com

Town Of Camp Verde
Finnie Flat Channel Improvements
Cover Sheet

Scale: N/A	Date: JUN 11	Job No: 86-13045
By: bs/bal/fnc	Ck'd: cl	Drawing No: N/A

Sheet C1 of Sheet 13

General Notes

1. The Town approves these plans for concept only. All liability for errors or omissions is the responsibility of the Design Engineer.
2. Approval of these plans by the Town is for a one-year period, subsequent to the date of approval. If construction work is not started within the one-year period, or has been discontinued for any reason for longer than one year, the plans shall be resubmitted for review and re-approval.
3. The work shall be done in accordance with the most current edition(s) of the following specifications and these plans:
   - a. MAG Uniform Standard Specifications for Public Works Construction.
   - b. MAG Uniform Standard Details for Public Works Construction.
   - c. Town of Camp Verde Supplement to MAG Uniform Standard Specifications for Public Works Construction and MAG Uniform Standard Details for Public Works Construction.
   - d. Yavapai County Drainage Design Criteria Manual
   - e. Camp Verde Water System Specifications and Details.
   - f. Arizona Revised Statues for Waterline Construction.
   - g. A.W.W.A. Standards.
   - h. M.U.T.C.D. Manual On Uniform Traffic Control Devices.
   - i. Arizona Department of Transportation Standard Specifications and Drawings.
   - j. The contractor shall follow the guidelines and regulations as set forth by OSHA.
   - k. It shall be the Contractor's responsibility to obtain copies of the above Standards, Specifications and Details, as well as all other standards and specifications which may be necessary to completely and accurately interpret these Plans. All work and materials which do not conform to the plans, standards and specifications are subject to removal and replacement at the contractor's expense.
4. Location of underground utilities shall be accomplished in accordance with ARS 40-360.21 through 40-360.29 prior to any excavation or earthwork.
5. The appropriate utility companies shall be notified by the Contractor prior to any construction. "Blue Stake" number is 1-800-STAKE-IT.
6. The Town shall be notified 48 hours prior to beginning different phases of construction so that Town inspectors may be scheduled.
7. All improvements shall be constructed by Contractors licensed by the Arizona State Registrar of Contractors, with a class of license(s) for the specific work being performed.
8. An approved set of plans shall be maintained on the job site at all times while work is in progress. Deviation from the plans will not be allowed without an approved plan revision.
9. The Contractor may submit carefully documented and considered written proposals for alternate materials and construction methods. These items must be approved by the Town Engineer prior to implementation.
10. Any work performed without the knowledge and approval of the Town Engineer or his authorized representative, is subject to removal and replacement at the contractor's expense.
11. The Contractor is responsible for obtaining any permits required for the work at his expense. The Contractor is responsible for determining what permits will be required for the work and for obtaining, at his own expense, all permits required unless stated otherwise in the Special Provisions. Contractor shall not begin construction unless all necessary approvals are obtained.
12. If work is done on private property in relation to a project constructed under these standards, the contractor will provide the Town with written authorization from the property owner to do so.
13. Approval of a portion of the work in progress does not guarantee its final acceptance. Testing and evaluation may continue until written final acceptance of a complete workable unit. Acceptance of completed improvements will not be given until defective or unauthorized work is removed, and final clean-up is complete.
14. The Town Engineer or his authorized representative may suspend the work by written notice when, in his judgment, progress is unsatisfactory, work being done is unauthorized or defective, weather conditions are unsuitable, or there is danger to the public health or safety.
15. The Town Engineer may order any or all materials used in the work to be tested according to the American Association of State Highway and Transportation Officials (AASHTO) and the American Society for Testing and Materials (ASTM) Standards. The Contractor shall, at his expense, supply all samples required for testing.
16. All excavated material shall be disposed of in accordance with applicable Town codes and regulations. The contractor shall obtain all required Town approvals and permits, as deemed necessary by the Town, to dispose of excavated material.
17. The accuracy of all construction work shall be maintained and verified by the Contractor's surveyor at the Contractors expense by providing construction staking suitable to the Town Engineer. Stakes will by set establishing lines and grades (finish or flowline) for all construction including roads, curb and gutter, sidewalks, utilities, structures, and other work as considered necessary by the Town Engineer. All survey control shall be set by the Contractor's surveyor from monuments acceptable to the Town Engineer. The Contractor's surveyor shall be a registered surveyor in the State of Arizona.
18. The Contractor shall produce "As-Built" reproducible plans at the completion of the project and provide the plans to the Town for the Town's records. Acceptance of the completed improvements will not be given until "As-Builts" have been submitted to the Town of Camp Verde. The as-built plan shall indicate the actual location of water mains, sewer mains, underground drainage structures, all sewer and water services, all fittings, valves, and manholes relative to right-of-way boundaries, lot lines, or other points of survey. As-built plans shall be legible and precise.
19. The Contractor shall be responsible for maintenance of the streets and of partially completed portions of the work until final acceptance of the work. The contractor shall submit to the Town Engineer for approval a construction schedule for any streets required to be closed or partially closed for the construction activity. The contractor shall reopen the streets no later than the opening date shown on the construction schedule or upon order of the Town Engineer.
20. The Contractor shall provide any necessary traffic control devices required for the control of vehicle and pedestrian traffic affected by the construction. All traffic control plans must be approved by the Town Engineer or his authorized representative prior to implementation.
21. Existing street and traffic signs will be maintained during construction and relocated by the Contractor as directed by the Town Engineer or his authorized representative.

Engineer's Notes

1. The contractor shall contact the engineer immediately if there are any discrepancies on these plans that come to his attention prior to construction.
2. Nothing contained in the contract documents shall create, nor shall be construed to create, any contractual relationship between the engineer and the contractor and the subcontractor.
3. The engineer will not be responsible for construction means, methods, techniques, sequences, or procedures or for safety precautions or programs utilized in connection with the work, and will not be responsible for the contractor's failure to carry out the work in accordance with the contract documents.
4. All conduits (i.e. box culverts, reinforced concrete pipe, cast-in-place pipe, and/or corrugated metal pipe) shown on these plans are designed for standard highway loading. The standard minimum cover requirements, as established by the conduit manufacturer, may not always be sufficient for loading conditions imposed by construction activity. If construction equipment will be driven close to or over the buried conduit, the contractor shall provide the additional cover required to avoid damage to the conduit. It shall be the responsibility of the contractor to analyze the adequacy of the additional cover requirements associated with loading conditions imposed by construction activities.
5. Locations of existing structures are indicated on the Plans, indicated locations are approximate only.
6. The Contractor shall be responsible for any and all damage to underground structures, utilities, or appurtenances during construction, whether items are shown on the plans or not.
7. Underground utility locations, as shown on these plans, were determined from field measurements, construction plans, record plans, or utility maps furnished by others. Locations of underground utilities are to be regarded as approximate only. It is the Contractor's responsibility to establish in the field the actual locations of all underground lines which may in any way affect the work.
8. Where plans call for connecting new structures to existing underground pipes or structures, it shall be the Contractor's responsibility to determine, at the time of construction, exact sizes, types and locations of existing underground improvements and to furnish materials as needed to make the required connections.
9. All quantities shown are approximate and are furnished solely for the Contractor's convenience. They do not necessarily correspond to Bid Schedule items. Payment will be based on Bid Schedule items. The Contractor shall not be relieved of responsibility for independently estimating work quantities prior to bidding.
10. The engineer makes no representation or guarantee regarding earthwork quantities or that the earthwork for this project will balance due to the varying field conditions, changing soil types, allowable construction tolerances and construction methods that are beyond the control of the engineer. No allowance has been made for shrink or swell.

Legend

- Proposed/Existing Asphalt Concrete
- Proposed/Existing Concrete
- Proposed/Existing Rip Rap
- Proposed/Existing Culvert/Stormdrain
- SS — Proposed/Existing Sewer Line
- W — Proposed/Existing Water Line
- E — Proposed/Existing Electric Line
- OHE — Proposed/Existing Overhead Electric Line
- CATV — Proposed/Existing Cable Line
- T — Proposed/Existing Telephone Line
- FO — Proposed/Existing Fiber Optic Liner
- G — Proposed/Existing Gas Line
- x — Proposed/Existing Fence
- Existing Easement
- 6895 — Proposed/Existing Index Contour (5')
- Proposed/Existing Interval Contour (1')
- New Channel Wall
- New Catch Basin
- New ADS Drain Basin
- Existing Tree
- Existing/Proposed Gas Meter
- Existing/Proposed Water Valve
- Existing/Proposed Fire Hydrant
- Existing/Proposed Utility Pole
- Existing/Proposed Light Pole
- Existing/Proposed Sewer Manhole
- Existing/Proposed Control Point

Estimated Quantities

BASE BID ESTIMATED QUANTITIES

ITEM No.	CONST. NOTE #	SHEET No.	ITEM DESCRIPTIONS	QTY	UNITS
CONCRETE CHANNEL CONSTRUCTION: STA. 104+50 TO STA. 109+75					
1	001	9	Remove and Dispose Portland Cement Conc	225	SF
2	002	9,11	Remove and Dispose Curb and Gutter	45	LF
3	010	9	Remove and Dispose of Existing Trees	2	EA
4	100	9	Remove and Re-install Existing Pedestrian B	1	LS
5	102	9	Relocate Existing Irrigation Line	1	LS
6	106	9	Remove and Relocate Existing Light Pole	1	LS
7	201	9	Guardrail including End Section	60	LF
8	202	8,9,10	Handrail	905	LF
9	204	9	Pedestrian Bridge Ramp (Concrete)	200	SF
10	500	8,9,10	15' Wide Concrete Channel	525	LF
11	501	8,9	MAG Type E Catch Basin w/curb and AC ma	2	EA
12	502	9	MAG Headwall Drop Inlet	1	EA
13	503	8,9,10	18" SRP Culvert	20	LF
14	504	8,9,10	Flap Gate	8	EA
15	508	9	12" SRP Culvert	6	LF
16	512	7,8,9	Grade to Drain per Detail 6	1	LS
17	513	9	Grade to Drain per Detail 7, Incl. 280 SF Con	1	LS
18	514	9,10	Grade to Drain per Detail 8	1	LS
19	515	7,8	Grade to Drain per Detail 9	1	LS
20	516	9	Grade to Drain per Detail 10, Incl. 540 SF Co	1	LS
21	517	9	Grade to Drain per Detail 11	1	LS
22	518	9,10	Grade to Drain per Detail 12	1	LS
23	520	10	Connect 18" RCP to Concrete Channel	2	EA
24	524	8	8" Nyloplast Drain Basin & Flap Gate	1	EA
25	525	9,10	15" Nyloplast Drain Basin & Flap Gate	2	EA
26	529	10	18" Flared End Section	1	EA
STREET,UTILITY, BOX CULVERT, & CHANNEL CONST.: STA. 109+75 TO STA. 113+70.18					
27	004	11	Remove and Dispose Asphalt Concrete	425	SY
28	005	11	Obliterate Existing Striping	1	LS
29	006	11	Remove and Dispose Storm Drain Pipe	80	LF
30	008	11	Slurry and Abandon Existing Storm Drain Pip	1	LS
31	009	11	Abandon Existing Waterline	250	LF
32	104	11	Adjust Manhole to Grade	1	EA
33	105	11	Adjust Water Valve to Grade	2	EA
34	205	11	5' Concrete Sidewalk	155	SF
35	206	11	4' AC/10"ABC	664	SY
36	207	11	MAG Type 'A' Curb and Gutter	233	LF
37	208	11	Traffic Control Signs	3	EA
38	209	11	Pavement Text and Symbol Markings	1	LS
39	210	11	Lane Striping	1	LS
40	304	11	6' DIA Class 350 DIP Waterline	225	LF
41	305	11	6' Water Gate Valve (Inserta Valve)	2	EA
42	531	11	18" SRP Culvert	32	LF
43	532	11	Modified MAG Type E Catch Basin	1	EA
44	533	11	8'x3' Box Culvert	206	LF
45	534	11	Connect Pipe Culvert to Box Culvert	3	EA
46	535	11	MAG 520 48" Storm Drain Manhole	1	EA
47	536	11	MAG 522 48" Storm Drain Manhole Shaft	1	EA
48	537	11	Concrete Vault	1	LS
49	538	10	Concrete Headwall	1	EA
50	539	11	MAG Type E Catch Basin	2	EA
51	540	11	Modified MAG Type G Catch Basin	1	EA
52	541	10,11	10' x 3.5' Box Culvert and Transitions	185	LF

OPTION 1 ESTIMATED QUANTITIES

ITEM NO.	CONST. NOTE#	SHEET No.	ITEM DESCRIPTION	APPR. QTY	UNITS
CONCRETE CHANNEL CONSTRUCTION STA. 100+00 TO STA. 104+50					
1	103	7	Remove and Replace Barbed Wire Fence	40	LF
2	202	7,8	Handrail	404	LF
3	203	7	New Barbed Wire Fence	7	LF
4	500	7,8	15' Wide Concrete Channel	416	LF
5	509	7	Riprap	12	CY
6	511	7	Grade to Drain per Detail 5	1	LS
7	521	7	Shotcrete Outlet Channel	1475	SF
8	523	8	Connect 4" PVC Pipe & Flap Gate	1	EA

OPTION 2, ESTIMATED QUANTITIES

ITEM NO.	CONST. NOTE#	SHEET No.	ITEM DESCRIPTION	APPR. QTY	UNITS
SHOTCRETE CHANNEL CONSTRUCTION STA. 100+00 TO STA. 104+50					
1	103	12	Remove and Replace Barbed Wire Fence	40	LF
2	203	12	New Barbed Wire Fence	7	0
3	509	12	Riprap	12	CY
4	511	12	Grade to Drain per Detail 5	1	0
5	521	12	Shotcrete Outlet Channel	1,475	SF
6	523	13	Connect 4" PVC Pipe & Flap Gate	1	EA
7	560	12,13	Shotcrete Channel	11,290	SF
8	561	13	50-Foot Concrete Channel Transition	1	LS

ALL REVISIONS DENOTED BY "CLOUD" SEALED BY Ronald Long

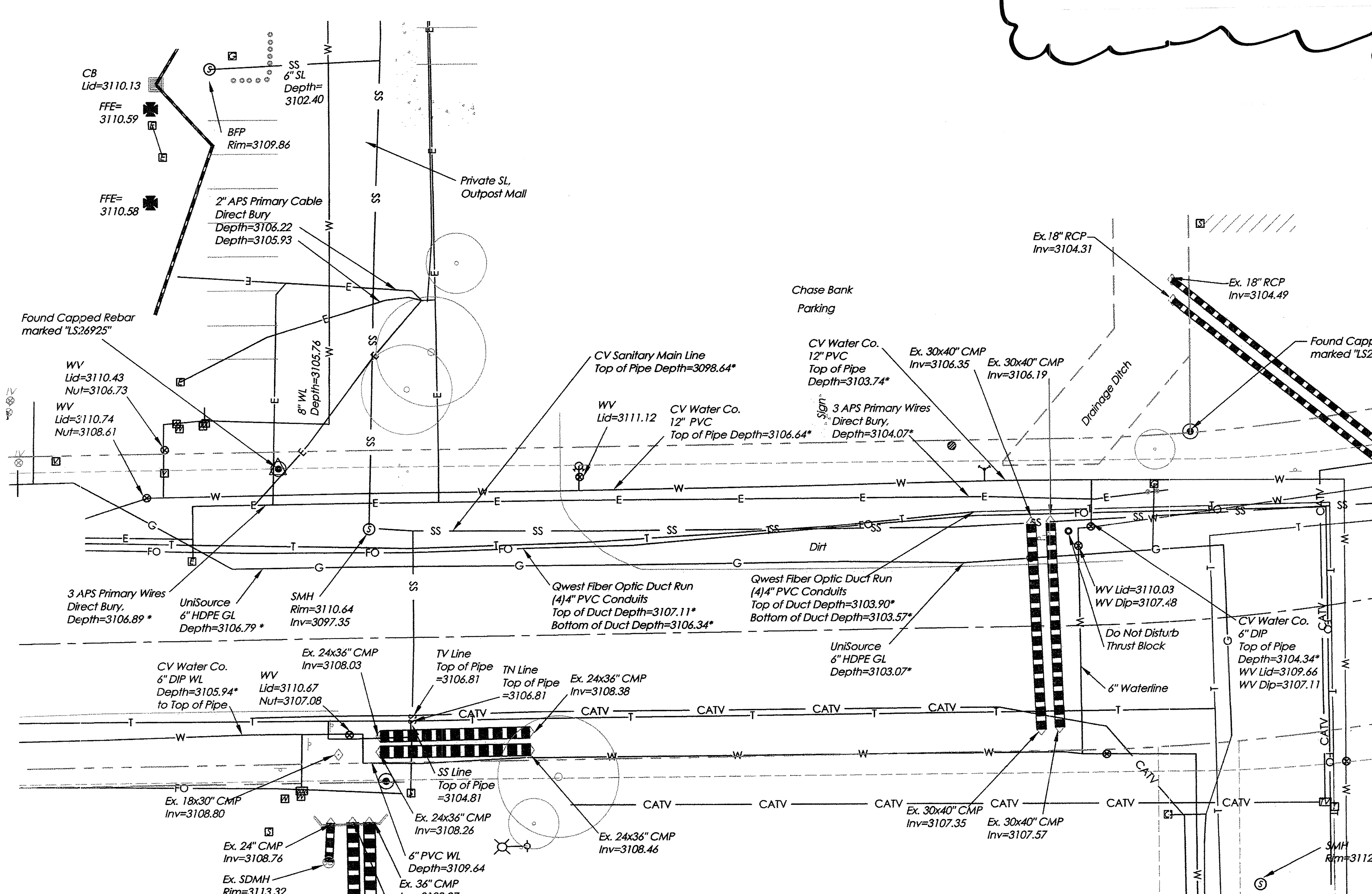

Existing Utility Locations

Not to Scale

Estimated Channel Earthwork Quantities

CUT 659 C.Y.
FILL 302 C.Y.
NET 357 C.Y. (cut)

Estimated Box Culvert Earthwork Quantities

CUT 620 C.Y.
FILL 330 C.Y.
NET 290 C.Y. (cut)

NOTE: THE QUANTITIES LISTED HEREON ARE FOR ESTIMATING AND PERMITTING PURPOSES ONLY. THE ENGINEER MAKES NO GUARANTEE OF ACCURACY. IT IS THE CONTRACTOR'S RESPONSIBILITY TO DETERMINE THE EXACT QUANTITIES BASED ON THE PLANS. NO ADJUSTMENTS HAVE BEEN MADE FOR SHRINK OR SWELL.

UTILITY NOTES:

1. Utilities are shown approximate only.

   * Utility depths were provided by the Town of Camp Verde from pot hole information.

2. Expose and protect existing utilities prior to construction. Confirm elevations prior to construction. Notify Town Engineer immediately if inverts are different than what is shown. Protect utilities during construction. The contractor is responsible for repairing any damaged utilities.

3. Notify APS when APS utilities are encountered for inspection and verification.

4. Notify Unisource when gas utilities are encountered for inspection and verification.

5. Coordinate relocation of telephone line with Qwest.

CALL TWO WORKING DAYS BEFORE YOU DIG
263-1100 OR 1-800-STAKE-IT
(OUTSIDE MARICOPA COUNTY)

Revisions: Estimated Quantities | Date: 1/17/12 | By: RL

GHD ARIZONA ENGINEERING
CLIENTS | PEOPLE | PERFORMANCE
1501 South Yale Street·Suite 101·Flagstaff·AZ·USA·1·928·774·7179·www.ghd.com

Town Of Camp Verde
Finnie Flat Channel Improvements
Notes / Quantities / Legend

Sheet C2 of 13 | Scale: N/A | By: bs/bal/fnc | Date: JUN 11 | Ckd: cl | Job No: 86-13045 | Drawing No: N/A

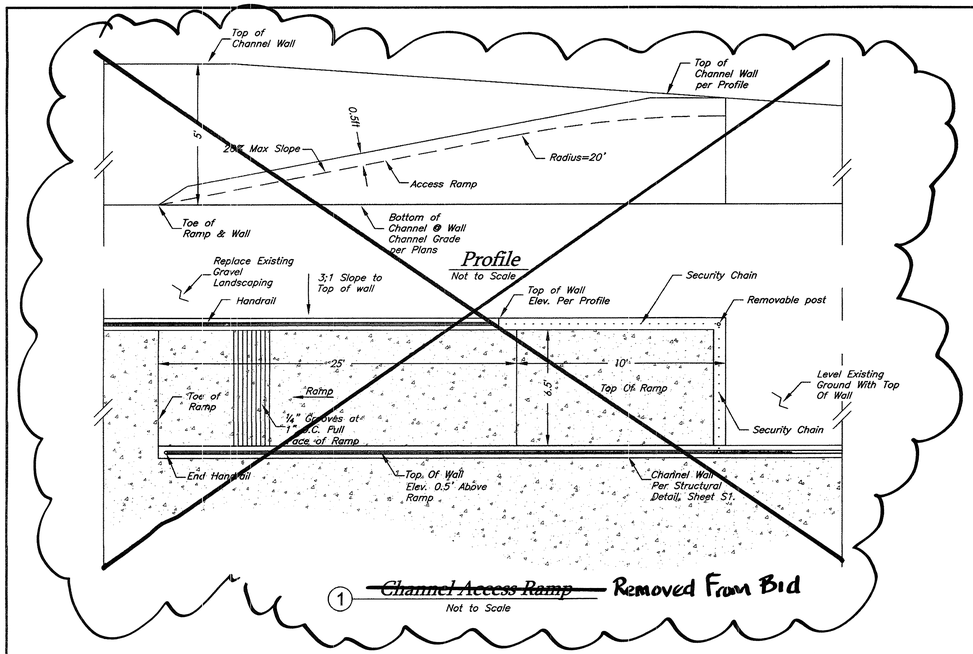

1 ~~Channel Access Ramp~~ Removed From Bid

Not to Scale

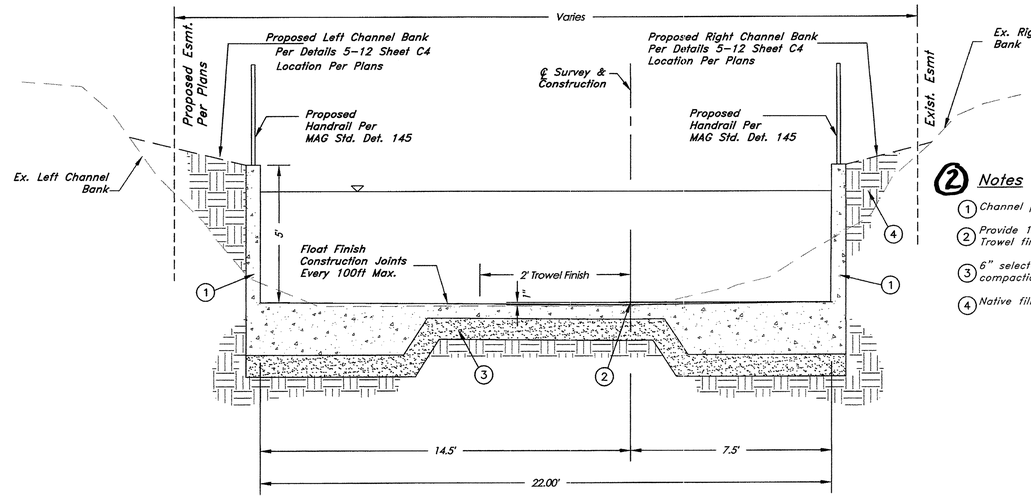

2 Notes

1. Channel per Structural Details Sheets S1 & S2
2. Provide 1" slab depression at construction centerline. Trowel finish 2' either side of centerline.
3. 6" select material per MAG Spec 702, 95% compaction.
4. Native fill material. 90% compaction.

2 Concrete Channel Detail

Sta.100+37.67 To Sta.101+24.25

Not to Scale

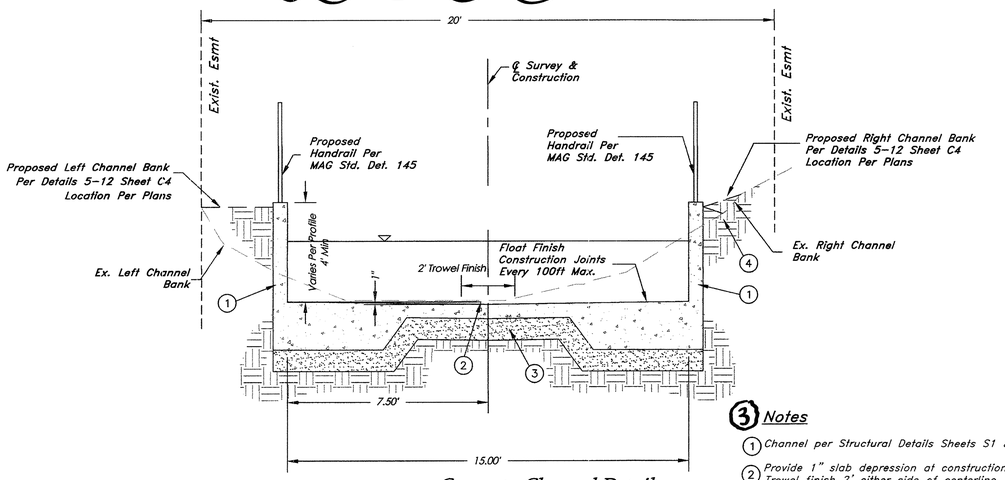

3 Notes

1. Channel per Structural Details Sheets S1 & S2
2. Provide 1" slab depression at construction centerline. Trowel finish 2' either side of centerline.
3. 6" select material per MAG Spec 702, 95% compaction.
4. Native fill material. 90% compaction.

3 Concrete Channel Detail

Sta.101+24.25 To 111+42.82

Not to Scale

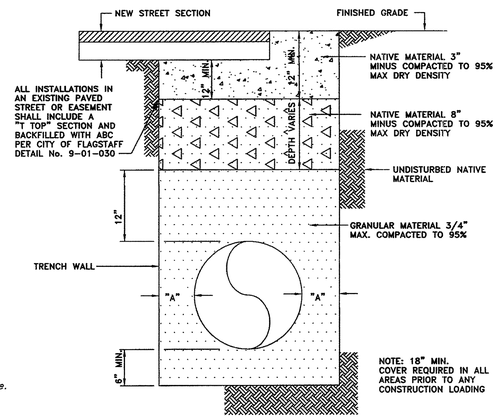

PIPE DIAMETER	"A"
LESS THAN 18"	6"
18" - 24"	7.5"
27" - 39"	9"

TYPICAL STORM DRAIN TRENCH

T1

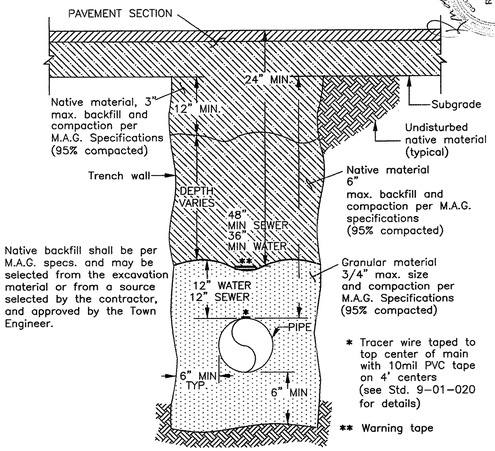

1. Native backfill shall be per M.A.G. specs. and may be selected from the excavation material or from a source selected by the contractor, and approved by the Town Engineer.

* Tracer wire taped to top center of main with 10mil PVC tape on 4' centers (see Std. 9-01-020 for details)

** Warning tape

2. Non-shrink backfill in accordance with Std. 9-06-030 and Detail 9-06-030 may be used for backfill up to existing subgrade. The non-shrink backfill shall be proportioned as follows: 2600 lbs of 3/8" minus aggregate, 800 lbs. sand, 94 lbs cement and 11 gallons water.

N.T.S.

TYPICAL TRENCHING AND BACKFILL

NEW PAVED STREET

T2

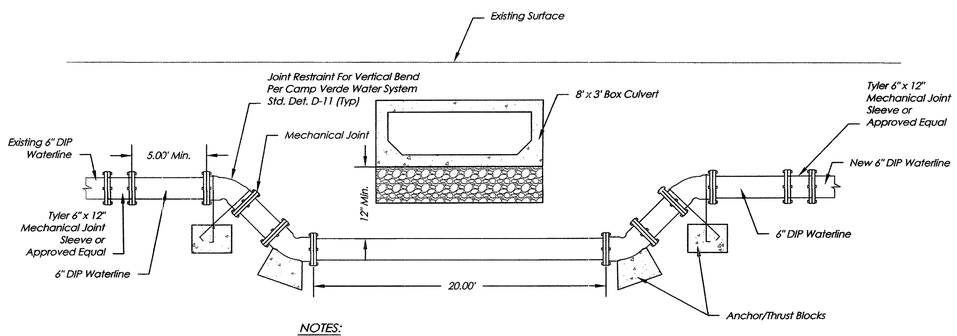

NOTES:

1. Anchor blocking per MAG Standard Detail 380 & 381.

4 Vertical Realignment of Water Main

Not to Scale

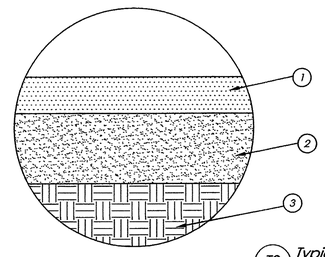

T3 Keynotes:

1. 4" thick, 19mm asphalt
2. 10" thick aggregate base course per MAG Spec. Sec. 310, compacted to 100% under pavement, curb, gutter, sidewalk, and driveways.
3. Subgrade preparation per MAG Spec. Sec. 301. Compaction to 95%.

T3 Typical Pavement Section

Not to Scale

CALL TWO WORKING DAYS BEFORE YOU DIG 253-1000 OR 1-800-STAKE-IT (OUTSIDE MARICOPA COUNTY)

By:

Date: 1/17/12

Revisions: Deleted Access Ramp Detail

G:\86\13045\CAD-BIS\CC\V03\VBF\CV\C03 - C3D\86-13045-BASE.dwg, 6/28/2011 11:34:04 AM

ARIZONA ENGINEERING

CLIENTS | PEOPLE | PERFORMANCE

GHD

1501 South Yale Street·Suite 101·Flagstaff·AZ·USA·1·928·774·7179·www.ghd.com

Town Of Camp Verde
Finnie Flat Channel Improvements
Details

Sheet	C3 of 13
Scale:	N/A
By:	bs/bd/fnc
Date:	MAY 11
Ckd:	cl
Job No:	86-13045
Drawing No:	N/A

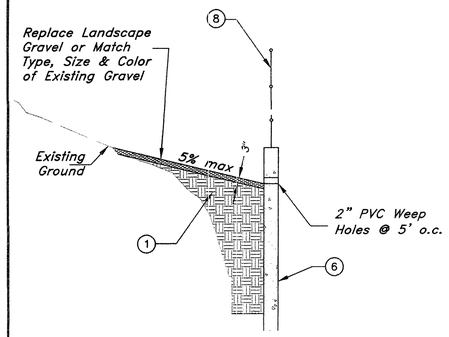

Sta. 100+00 to 103+08.26 L

5 Grading Detail "A"

Not to Scale

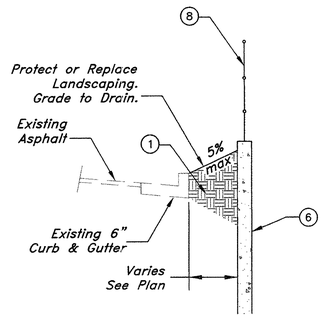

Sta. 103+08.26 to 109+32.65 L
Sta. 110+75.95 to 111+38.82 L

6 Grading Detail "B"

Not to Scale

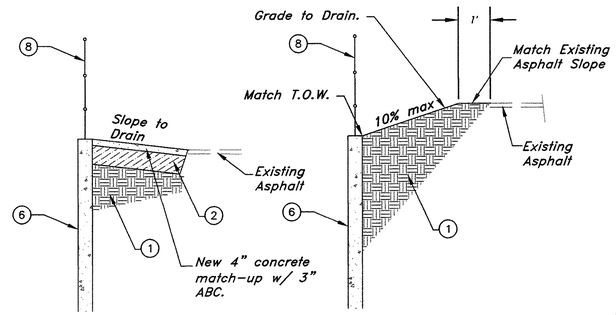

Sta. 106+08.62 to 106+47.18 R

Sta. 107+67.09 to 108+30.43 R

7 Grading Detail "C"

Not to Scale

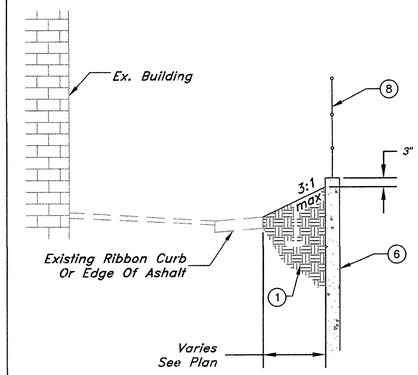

Sta. 109+59.07 to 110+75.95 L

8 Grading Detail "D"

Not to Scale

Notes

1. Native Backfill Material 4" minius per MAG Spec. Sect 206 Compacted to 90% per MAG Spec. Sect 601.
2. ABC per MAG Spec. Sect. 211 Compacted 95% per MAG Sect 601.
4. Remove existing pedestrian bridge during construction.
5. Class A PCC per MAG Spec. Sect. 725.
6. Channel Wall or slab per Concrete Retaining Wall Details, Sheet S1& S2. Provide expansion joints every 100'. Waterstops shall be Greenstreak 732 or Approved Equal.
7. Remove existing pedestrian bridge. Pedestrian bridge shall be stored in a safe location until the end of construction. Replace pedestrian bridge at the end of construction per Detail 15, This Sheet.
8. Handrail per MAG Std. Det. 145 with Type 1 Anchor Plate Detail.

General Note:

1) If areas adjacent to channel are above channel walls and existing drainage is toward the channel, grade/slope to drain to the top of the wall.

2) If areas adjacent to channel are below channel walls and existing drainage is away from the channel, grade/slope to drain away from the channel.

3) If areas adjacent to the channel are below channel walls and existing drainage is toward the channel, Install 2" PVC weep holes at 5' on center and grade to weep holes. Weep holes shall be installed in low spots to prevent ponding, and as close to the top of the wall as allowable based on adjacent grading. Provide 3" minimum clear.

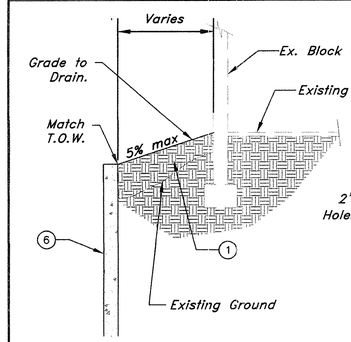

Sta. 100+77.42 to 101+21.81 R
Sta. 101+32.01 to 101+72.54 R
Sta. 101+83.79 to 102+24.34 R
Sta. 102+36.32 to 102+76.40 R
Sta. 103+06.91 to 104+49.73 R
Sta. 104+61.01 to 105+01.47 R
Sta. 105+13.42 to 105+53.87 R
Sta. 105+66.88 to 106+08.62 R

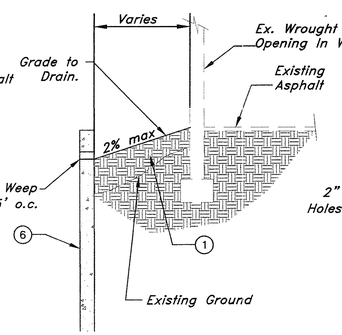

Sta. 101+21.81 to 101+32.01 R
Sta. 101+72.54 to 101+83.79 R
Sta. 102+24.34 to 102+36.32 R
Sta. 102+76.40 to 103+06.91 R
Sta. 104+49.73 to 104+61.01 R
Sta. 105+01.47 to 105+13.42 R
Sta. 105+53.87 to 105+66.88 R

9 Grading Detail "E"

Not to Scale

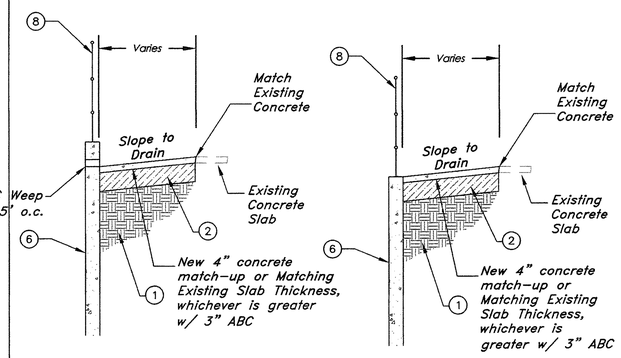

Sta. 108+04.71 to 108+18.84 R

Sta. 106+47.18 to 108+04.71 R

10 Grading Detail "F"

Not to Scale

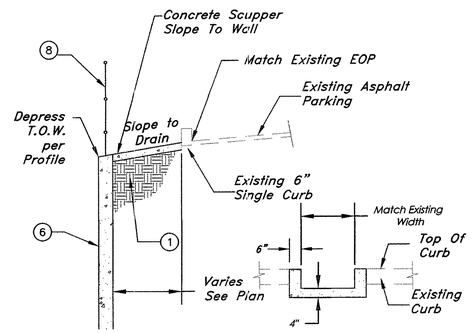

Sta. 108+94.04 to 108+97.13 R
Sta. 110+36.84 to 110+39.07 R

11 Grading Detail "G"

Not to Scale

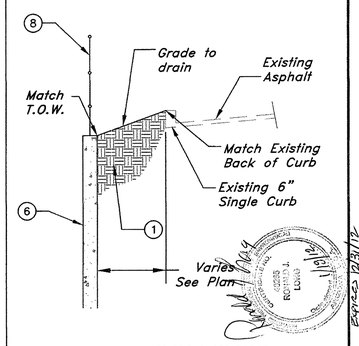

Sta. 108+18.84 to 108+94.04 R
Sta. 108+97.13 to 110+36.84 R
Sta. 110+39.07 to 111+61.10 R

12 Grading Detail "H"

Not to Scale

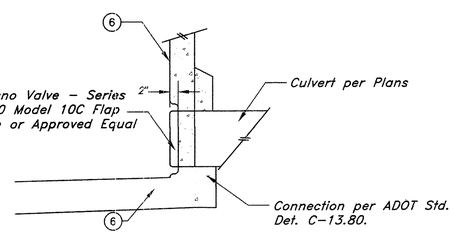

Channel Wall Drain Detail
For New & Existing Storm Drain Piping

14 Not to Scale

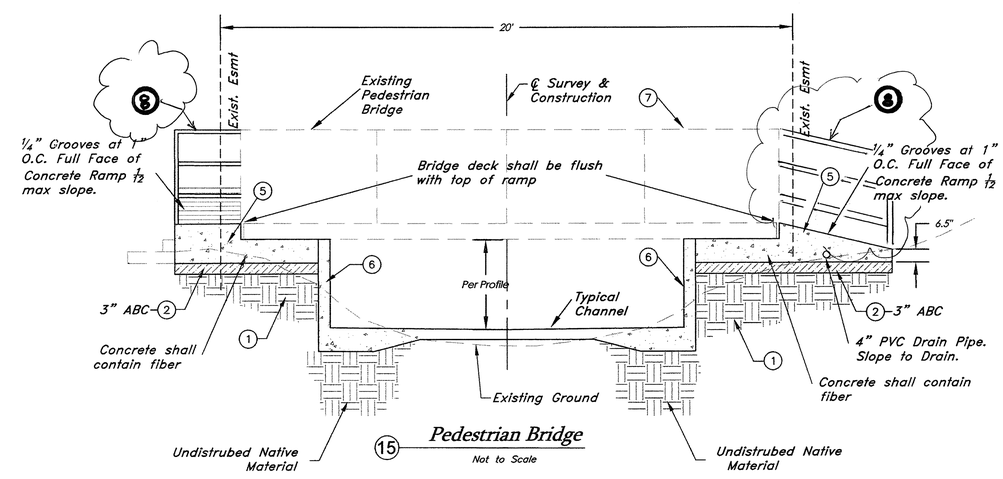

15 Pedestrian Bridge

Not to Scale

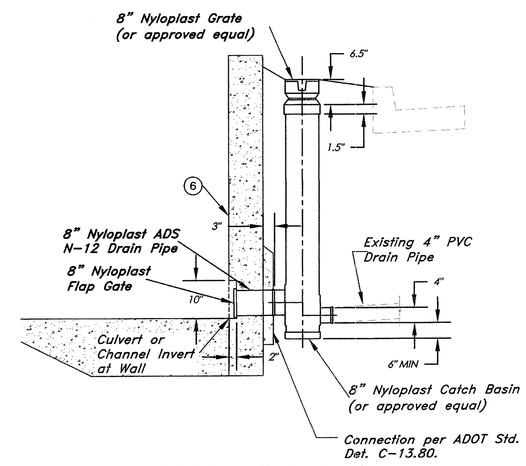

16 ADS Catch Basin Detail

Not to Scale

CALL TWO WORKING DAYS BEFORE YOU DIG 263-1000 OR 1-800-STAKE-IT (OUTSIDE MARICOPA COUNTY)

Revisions: Revised Detail #15 | Date: 1/17/12 | By: E

ARIZONA ENGINEERING
CLIENTS | PEOPLE | PERFORMANCE

GHD
1501 South Yale Street·Suite 101·Flagstaff·AZ·USA·1·928·774·7179·www.ghd.com

Town Of Camp Verde
Finnie Flat Channel Improvements
Details

Sheet 13 of 13 | Sheet C4 | Scale: N/A | By: bs/bal/mc | Date: JUN 11 | Ckd: al | Job No: 86-13045 | Drawing No: N/A

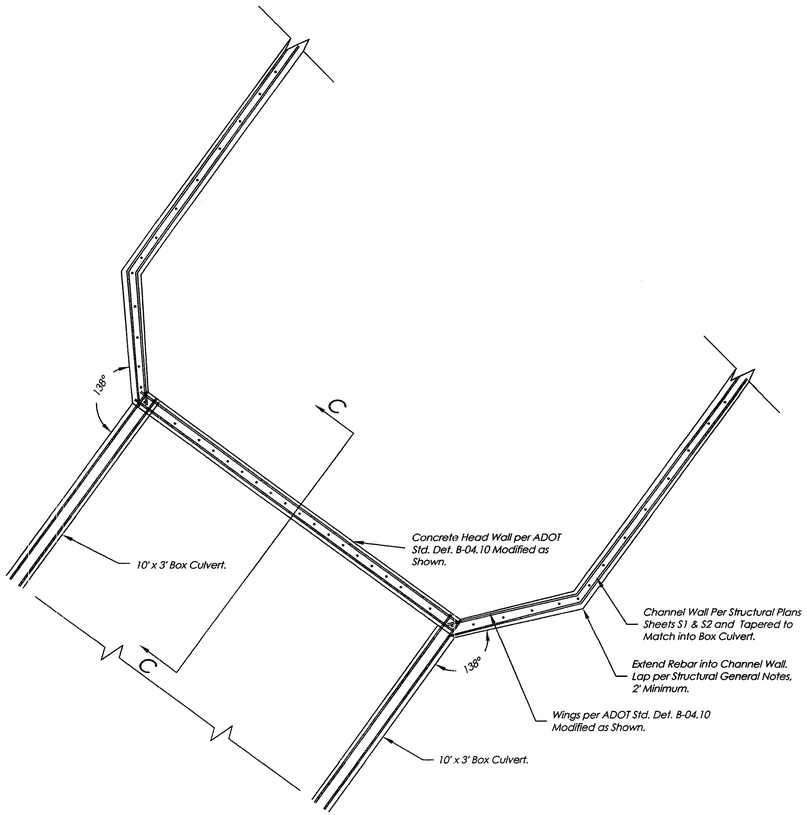

17 North End Culvert to Channel Connection Detail

Not to Scale

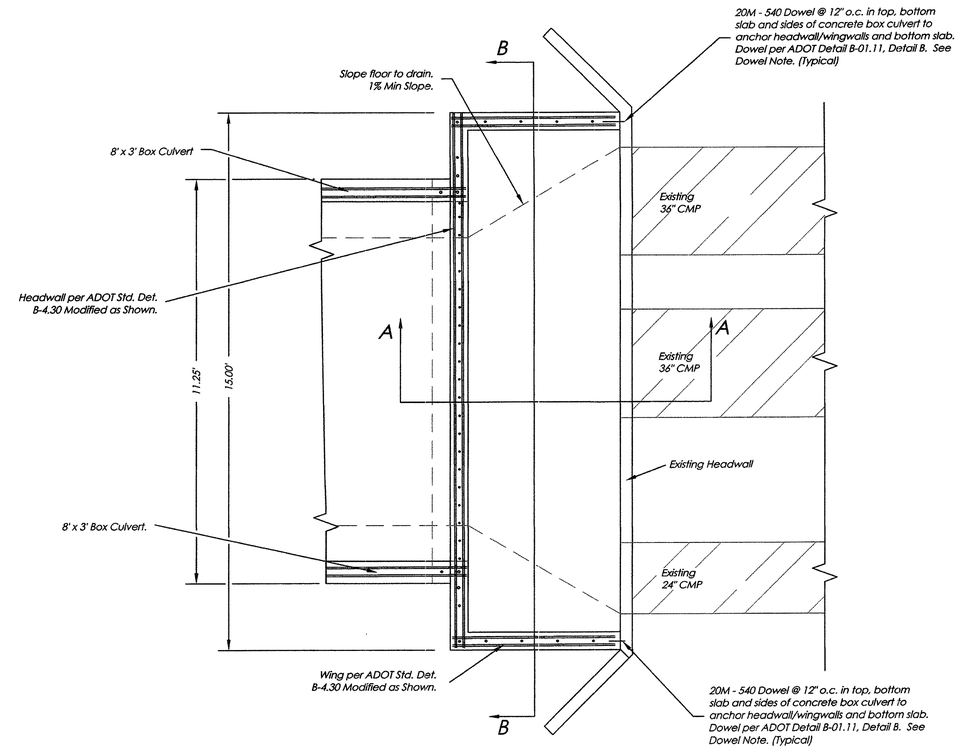

18 South End Culvert to Headwall Connection Detail

Not to Scale

Dowel Note:
Drill 1" hole 3" Deep for 20M dowel in hole with an approved epoxy adhesive. Epoxy anchorage shall develop a tensile pullout strength of 13.7 kip-ft. Details of the anchorage system shall be submitted to the Engineer for approval prior to installation.

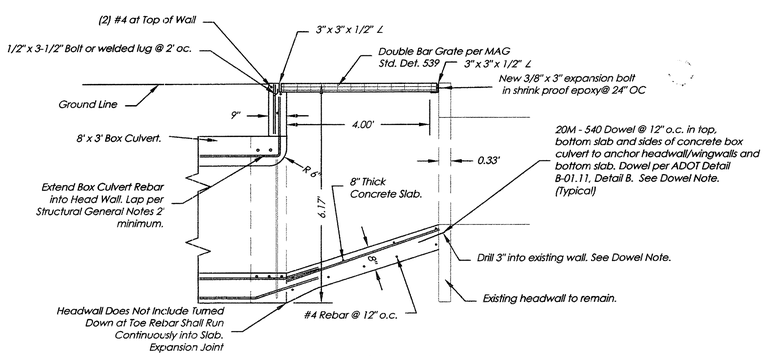

Section A-A

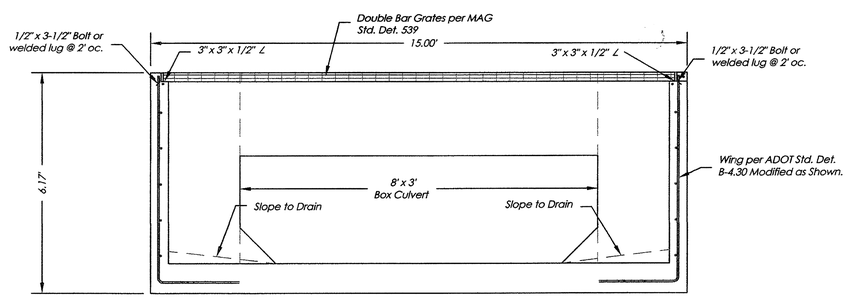

Section B-B

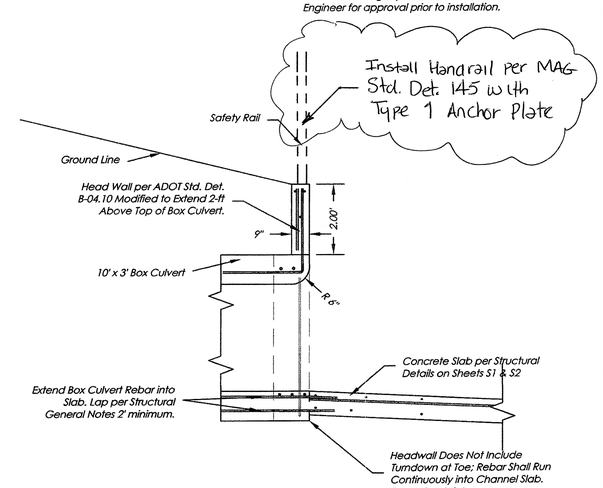

Section C-C

CALL TWO WORKING DAYS BEFORE YOU DIG
263-1000 OR
1-800-STAKE-IT
(OUTSIDE MARICOPA COUNTY)

Revisions:	Date:	By:
Add Note to Section C-C	1/17/12	R

ARIZONA ENGINEERING
CLIENTS | PEOPLE | PERFORMANCE

GHD
1501 South Yale Street·Suite 101·Flagstaff·AZ·USA·1·928·774·7179·www.ghd.com

Town Of Camp Verde
Finnie Flat Channel Improvements
Details

Job No: 86-130045	Drawing No: N/A
Date: JUN 11	Ck'd: cl
Scale: N/A	By: bs/bal/fmc
Sheet C5 of 13	

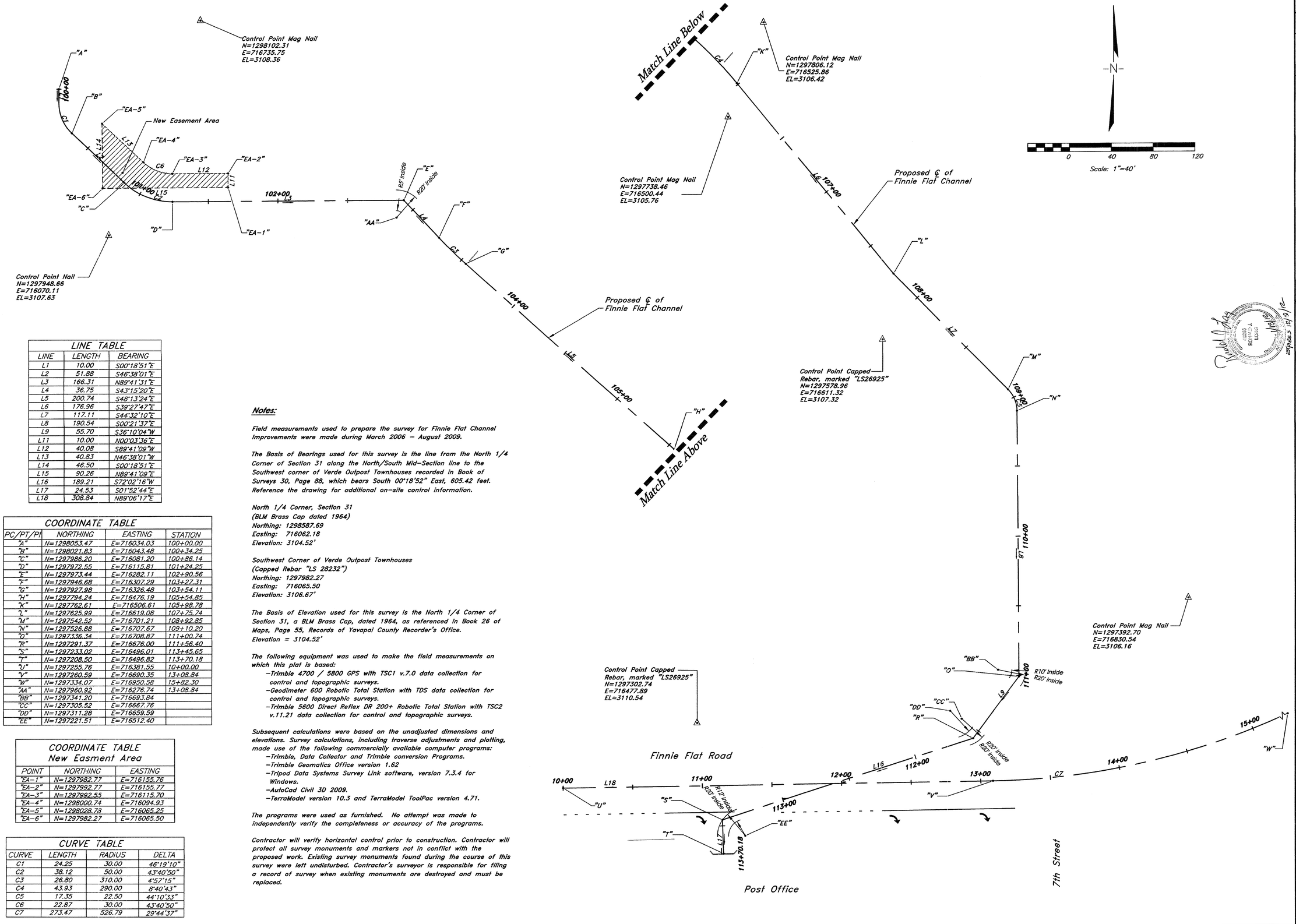

LINE TABLE		
LINE	LENGTH	BEARING
L1	10.00	S00°18'51"E
L2	51.88	S46°38'01"E
L3	166.31	N89°41'31"E
L4	36.75	S43°15'20"E
L5	200.74	S48°13'24"E
L6	176.96	S39°27'47"E
L7	117.11	S44°32'10"E
L8	190.54	S00°21'37"E
L9	55.70	S36°10'04"W
L11	10.00	N00°03'36"E
L12	40.08	S89°41'09"W
L13	40.83	N46°38'01"W
L14	46.50	S00°18'51"E
L15	90.26	N89°41'09"E
L16	189.21	S72°02'16"W
L17	24.53	S01°52'44"E
L18	308.84	N89°06'17"E

COORDINATE TABLE			
PC/PT/PI	NORTHING	EASTING	STATION
"A"	N=1298053.47	E=716034.03	100+00.00
"B"	N=1298021.83	E=716043.48	100+34.25
"C"	N=1297986.20	E=716081.20	100+86.14
"D"	N=1297972.55	E=716115.81	101+24.25
"E"	N=1297973.44	E=716282.11	102+90.56
"F"	N=1297946.68	E=716307.29	103+27.31
"G"	N=1297927.98	E=716326.48	103+54.11
"H"	N=1297894.24	E=716476.19	105+54.85
"K"	N=1297762.61	E=716506.61	105+98.78
"L"	N=1297625.99	E=716619.08	107+75.74
"M"	N=1297542.52	E=716701.21	108+92.85
"N"	N=1297526.88	E=716707.67	109+10.20
"O"	N=1297336.34	E=716708.87	111+00.74
"R"	N=1297291.37	E=716676.00	111+56.40
"S"	N=1297233.02	E=716496.01	113+45.65
"T"	N=1297208.50	E=716496.82	113+70.18
"U"	N=1297255.76	E=716381.55	10+00.00
"V"	N=1297260.59	E=716690.35	13+08.84
"W"	N=1297334.07	E=716950.58	15+82.30
"AA"	N=1297960.92	E=716276.74	13+08.84
"BB"	N=1297341.20	E=716693.84	
"CC"	N=1297305.52	E=716667.76	
"DD"	N=1297311.28	E=716659.59	
"EE"	N=1297221.51	E=716512.40	

COORDINATE TABLE New Easment Area		
POINT	NORTHING	EASTING
"EA-1"	N=1297982.77	E=716155.76
"EA-2"	N=1297992.77	E=716155.77
"EA-3"	N=1297992.55	E=716115.70
"EA-4"	N=1298000.74	E=716094.93
"EA-5"	N=1298028.78	E=716065.25
"EA-6"	N=1297982.27	E=716065.50

CURVE TABLE			
CURVE	LENGTH	RADIUS	DELTA
C1	24.25	30.00	46°19'10"
C2	38.12	50.00	43°40'50"
C3	26.80	310.00	4°57'15"
C4	43.93	290.00	8°40'43"
C5	17.35	22.50	44°10'33"
C6	22.87	30.00	43°40'50"
C7	273.47	526.79	29°44'37"

Notes:

Field measurements used to prepare the survey for Finnie Flat Channel Improvements were made during March 2006 – August 2009.

The Basis of Bearings used for this survey is the line from the North 1/4 Corner of Section 31 along the North/South Mid-Section line to the Southwest corner of Verde Outpost Townhouses recorded in Book of Surveys 30, Page 88, which bears South 00°18'52" East, 605.42 feet. Reference the drawing for additional on-site control information.

North 1/4 Corner, Section 31
(BLM Brass Cap dated 1964)
Northing: 1298587.69
Easting: 716062.18
Elevation: 3104.52'

Southwest Corner of Verde Outpost Townhouses
(Capped Rebar "LS 28232")
Northing: 1297982.27
Easting: 716065.50
Elevation: 3106.67'

The Basis of Elevation used for this survey is the North 1/4 Corner of Section 31, a BLM Brass Cap, dated 1964, as referenced in Book 26 of Maps, Page 55, Records of Yavapai County Recorder's Office.
Elevation = 3104.52'

The following equipment was used to make the field measurements on which this plat is based:
- Trimble 4700 / 5800 GPS with TSC1 v.7.0 data collection for control and topographic surveys.
- Geodimeter 600 Robotic Total Station with TDS data collection for control and topographic surveys.
- Trimble 5600 Direct Reflex DR 200+ Robotic Total Station with TSC2 v.11.21 data collection for control and topographic surveys.

Subsequent calculations were based on the unadjusted dimensions and elevations. Survey calculations, including traverse adjustments and plotting, made use of the following commercially available computer programs:
- Trimble, Data Collector and Trimble conversion Programs.
- Trimble Geomatics Office version 1.62
- Tripod Data Systems Survey Link software, version 7.3.4 for Windows.
- AutoCad Civil 3D 2009.
- TerraModel version 10.3 and TerraModel ToolPac version 4.71.

The programs were used as furnished. No attempt was made to independently verify the completeness or accuracy of the programs.

Contractor will verify horizontal control prior to construction. Contractor will protect all survey monuments and markers not in conflict with the proposed work. Existing survey monuments found during the course of this survey were left undisturbed. Contractor's surveyor is responsible for filing a record of survey when existing monuments are destroyed and must be replaced.

CALL TWO WORKING DAYS BEFORE YOU DIG
2-BLUE-STAKES OR 1-800-STAKE-IT
(OUTSIDE MARICOPA COUNTY)

Revisions:	Date:	By:

G:\86\13045\CAD-GBF\CIV\03\GBFCIV03.dwg - C3D\86-13045-BASE.dwg, 6/28/2011 11:31:43 AM

Rudolph Arthur Gerig
Registered Land Surveyor
Expires 12/31/12

ARIZONA ENGINEERING
CLIENTS | PEOPLE | PERFORMANCE
GHD
1501 South Yale Street·Suite 101·Flagstaff·AZ·USA·1·928·774·7179·www.ghd.com

Registered Professional Engineer (Civil)
CERTIFICATE NO. 44708
DAVID BRUCE LANTING
Date Signed 6/28/11
Expires 6/30/12

Town Of Camp Verde
Finnie Flat Channel Improvements
Horizontal Control

Sheet C6 of 13
Scale: 1"=40'
By: bs/baj/fnc
Date: MAY 11
Ck'd: al
Job No: 86-13045
Drawing No:

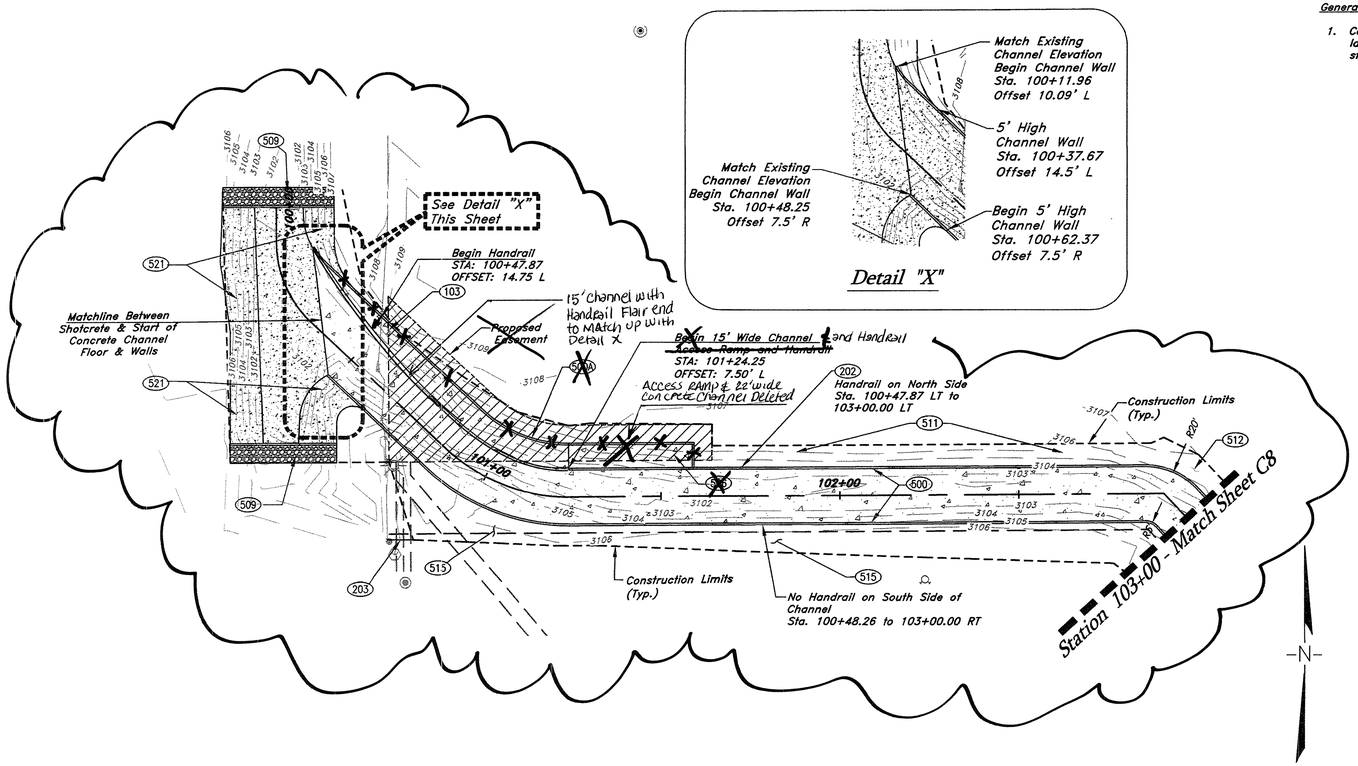

Detail "X"

GRAPHIC SCALE 1" = 20'

20 0 20 40 60

General Notes

1. Contractor shall protect existing landscaping, irrigation, and street lights.

Construction Notes

Note 103 40 LF
Remove and replace existing barbed wire fence to the nearest fence pole.

Note 202 289 LF
Install Handrail per MAG Std. Det. 145 with Type 1 Anchor Plate Detail.

Note 203 7 LF
Install New Barbwire Fence in the location shown.

Note 500 176 LF
Construct 15' wide Concrete Channel per Details 2 & 3, Sheet C3, and the structural Details on Sheets S1 and S2. Includes weir construction.

~~Note 500A 90 LF~~
~~Construct 22' wide Concrete Channel per Details 2 & 3, Sheet C3 and Structural Details on Sheets S1 & S2.~~

~~Note 506 1 LS~~
~~Construct channel access ramp per Detail 1, Sheet C3.~~

Note 509 12 CY
Construct riprap in the locations shown. Riprap shall be hand placed 6"-12" native stone, 12" deep. Slope riprap to drain.

Note 511 1 LS, 154 SY Landscape rock
Grade to drain this area Per Grading Detail 5 Sheet C4. Includes landscaping rock.

Note 512 1 LS
Grade to drain this area Per Grading Detail 6 Sheet C4.

Note 515 1 LS
Grade to drain this area Per Grading Detail 9 Sheet C4.

Note 521 1475 SF
Install 4" Shotcrete to Match Existing Channel Bank, Slopes, & Floor in areas where the two channels meet as shown on plan.

Expires 12/31/12

Horizontal Scale: 1" = 20'
Vertical Scale: 1" = 2'

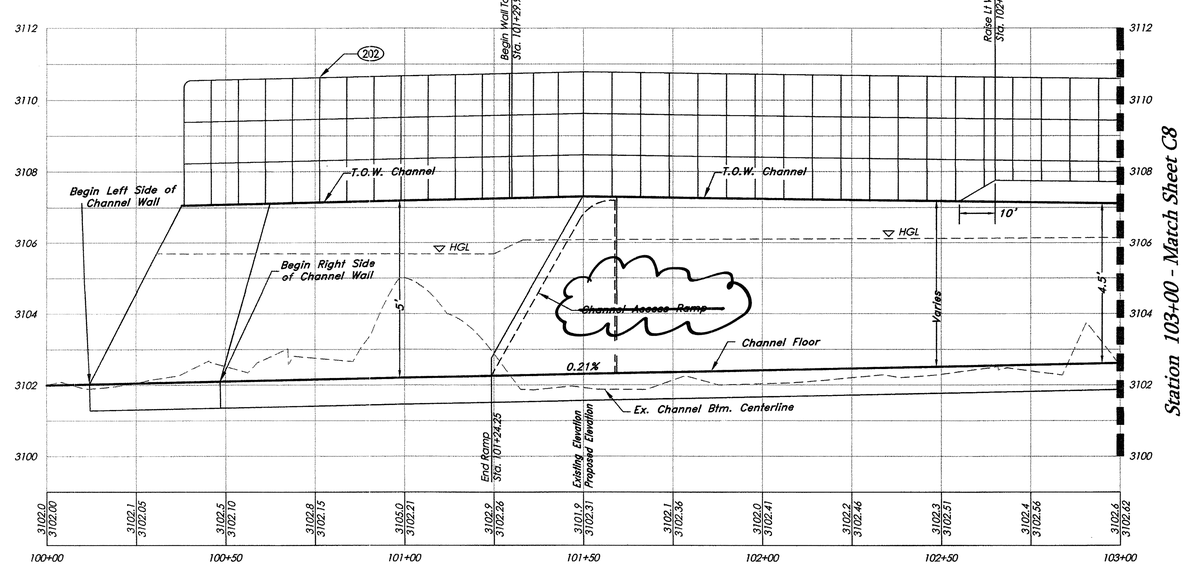

CALL TWO WORKING DAYS BEFORE YOU DIG 263-8000 OR 1-800-STAKE-IT (OUTSIDE MARICOPA COUNTY)

Revisions:	Date:	By:
Deleted Access Ramp and 22' Wide Channel.		
Revised Title and Construction Notes	1/17/12	

ARIZONA ENGINEERING
CLIENTS | PEOPLE | PERFORMANCE

GHD
1501 South Yale Street·Suite 101·Flagstaff·AZ·USA·1·928·774·7179·www.ghd.com

Option 1

Town Of Camp Verde
Finnie Flat Channel Improvements
~~Add Alt~~ Rectagular Concrete Channel
Sta. 100+00 to 103+00

Sheet	Scale: 1"=20'	Date: JUN 11	Job No: 86-13045
Sheet C7 of 13	By: bs/bal/fnc	Ckd: cl	Drawing No: N/A

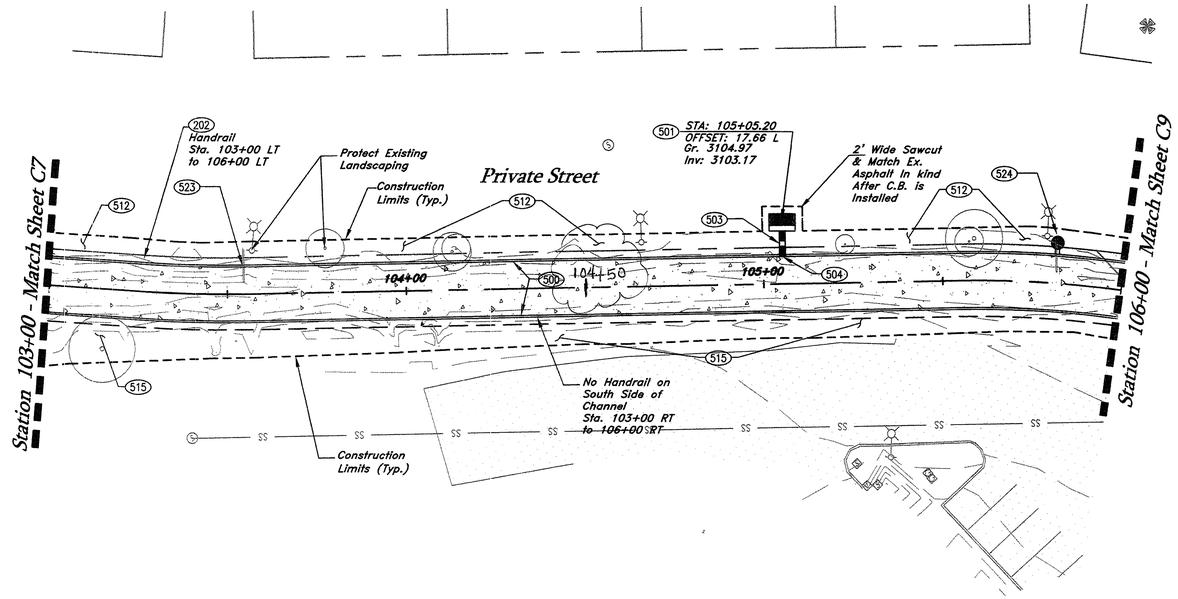

General Notes

1. Contractor shall protect existing landscaping, irrigation, and street lights.

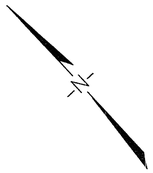

GRAPHIC SCALE 1" = 20'

20 0 20 40 60

Construction Notes

Note 202 300 LF
Install Handrail per MAG Std. Det. 145 with Type 1 Anchor Plate Detail.

Note 500 300 LF
Construct 15' wide Concrete Channel per Details 2 & 3, Sheet C3, and the structural Details on Sheets S1 and S2. Includes weir construction.

Note 501 1 EA
Construct Type 'E' Catch Basin per MAG Std. Det. 534. Construction includes removal and replacement of existing curb to the nearest construction joint and removal of existing pavement section to a neat saw cut line. Replacement pavement section shall match existing.

Note 503 8 LF
Install 18" Galvanized spiral ribbed culvert. Slope bottom of catch basin to drain to culvert. Connect culvert to proposed channel per Detail 14, Sheet C4.

Note 504 1 EA
Install flap gate at the outlet of pipe per Detail 14, Sheet C4. Flap gate size shall match pipe outlet size.

Note 512 1 LS
Grade to drain this area Per Grading Detail 6 Sheet C4.

Note 515 1 LS
Grade to drain this area Per Grading Detail 9 Sheet C4.

Note 523 1 EA
Cut off & Connect Existing 4" PVC storm drain piping to new channel wall, and adjust existing pipe slope Invert Elev. to match New Channel floor Grade at connection point. Includes Flap Gate.

Note 524 1 EA
Construct ADS Catch Basin per Detail 16 Sheet C4.

Note: Options 1 and 2 start at Sta. 100+00 and end at sta. 104+50. The Base Bid Starts at sta. 104+50 and ends at sta. 113+70.18

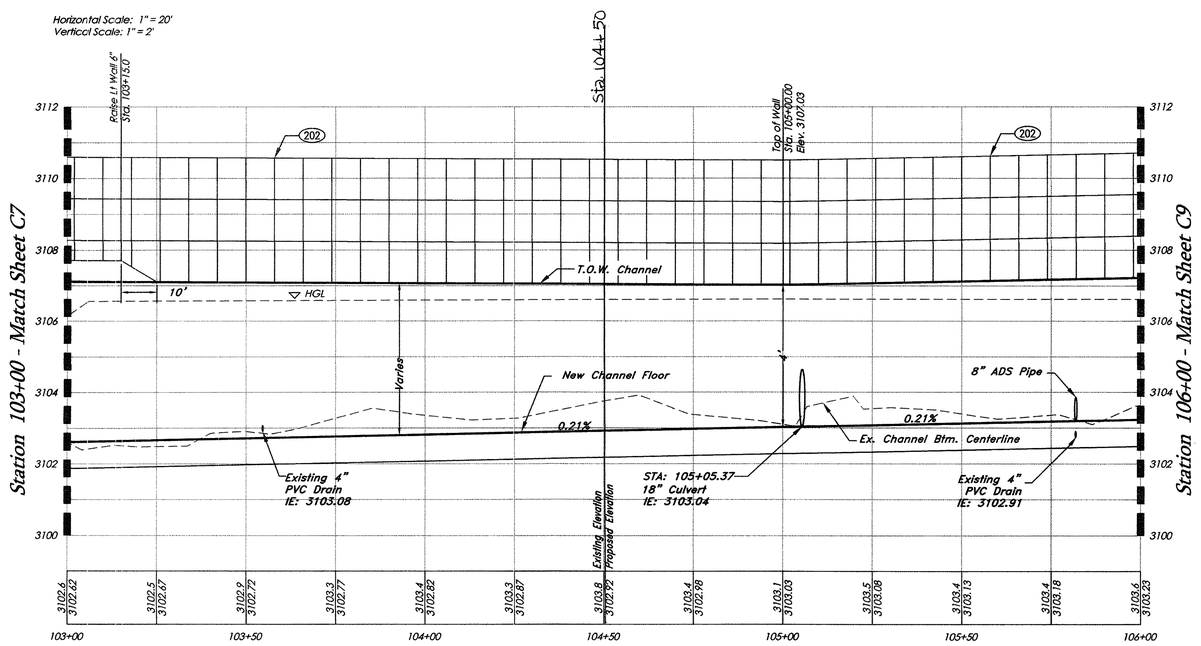

Option 1

Town Of Camp Verde
Finnie Flat Channel Improvements
~~Rectagular Concrete Channel~~
~~Add Alt Sta. 103+00 to 104+50~~
Base Bid Sta. 104+50 to 106+00

Sheet	Scale: 1"=20'	Date: JUN 11	Job No: 86-13045
Sheet C8 of 13	By: bs/bal/fnc	Ckd: al	Drawing No: N/A

CALL TWO WORKING DAYS BEFORE YOU DIG
263-1000 OR
1-800-STAKE-IT
(OUTSIDE MARICOPA COUNTY)

Revisions:	Date:	By:
Revised Sheet Title and added a general note.	7/7/12	

G:\86\13045\CAD-08TOCV03\08TOVC03 - C3D\86-13045-BASE.dwg, 6/30/2011 8:45:20 AM

ARIZONA ENGINEERING
CLIENTS | PEOPLE | PERFORMANCE

GHD
1501 South Yale Street Suite 101 Flagstaff AZ USA 11928 - 774-71179 www.ghd.com

44706 CALEB A. LAMING
Expires 6/30/12

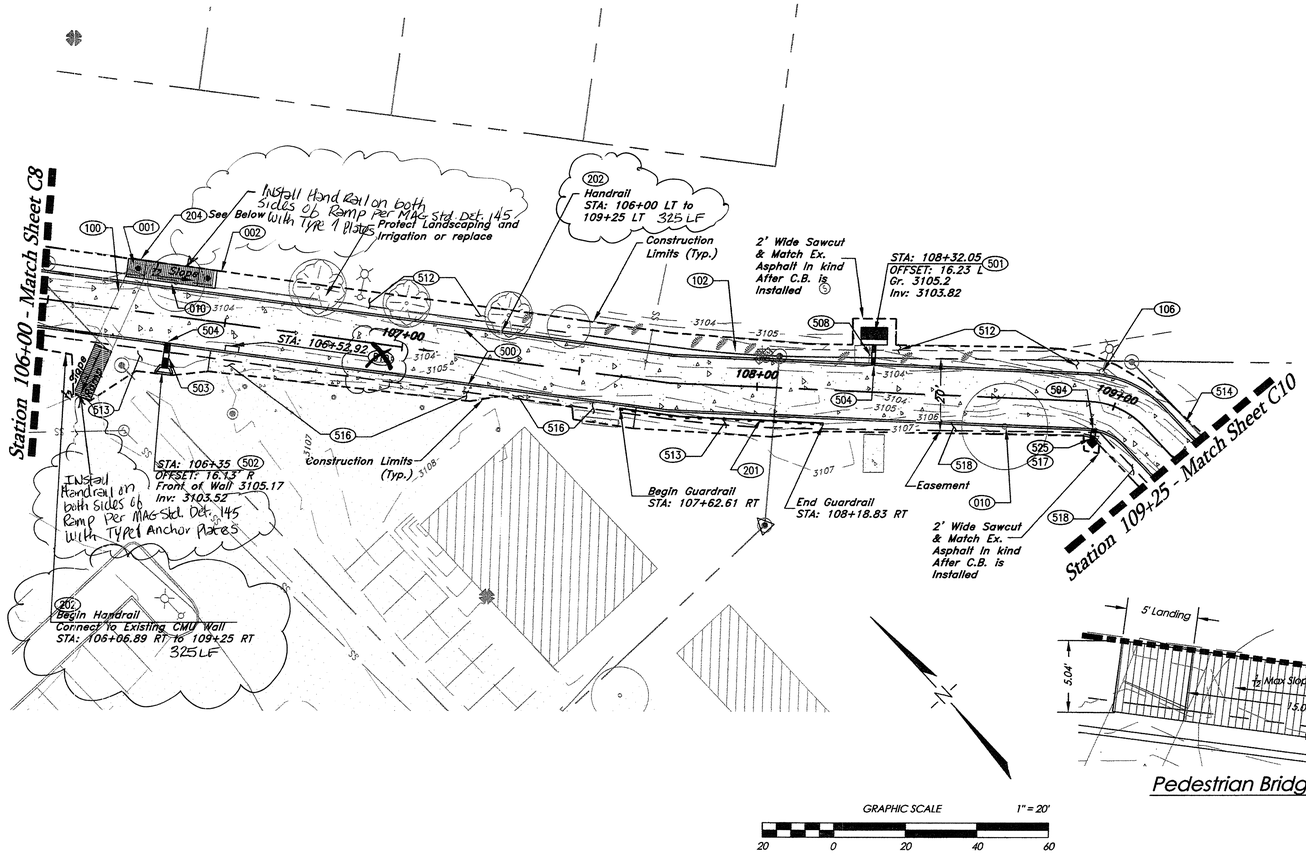

General Notes

1. Contractor shall protect existing landscaping, irrigation, and street lights.

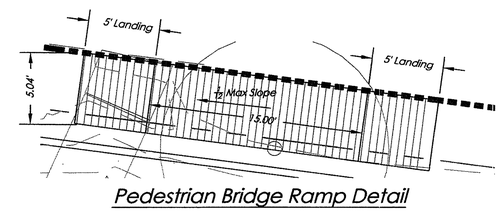

Pedestrian Bridge Ramp Detail

GRAPHIC SCALE 1" = 20'

20 0 20 40 60

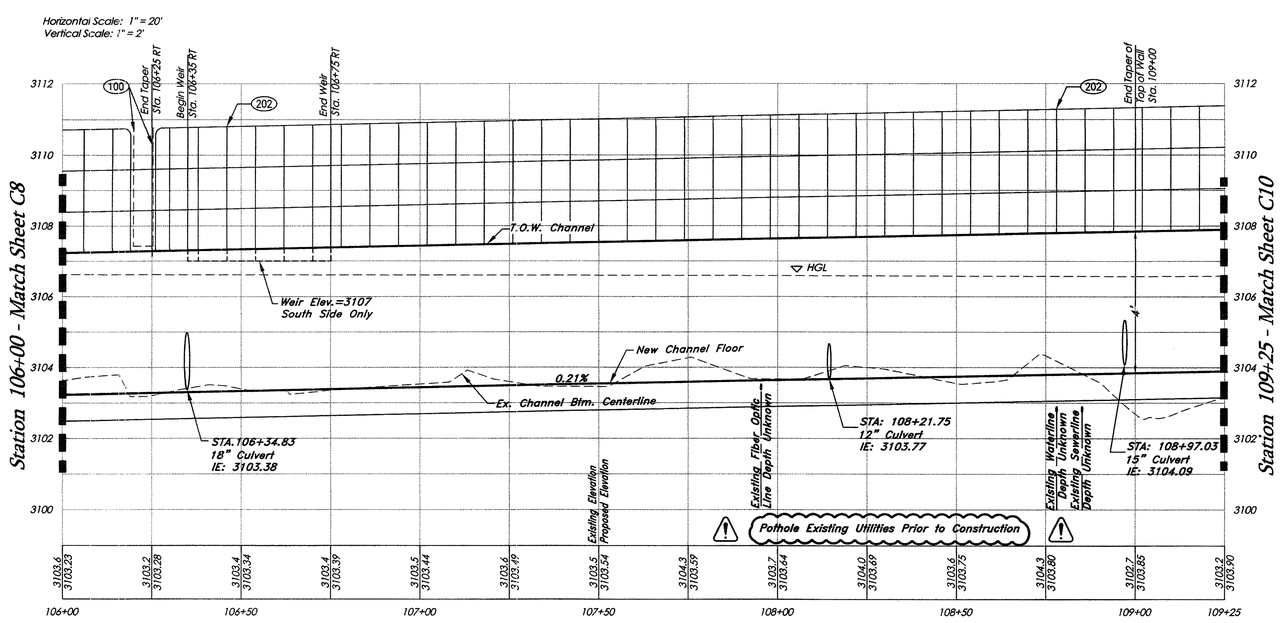

Construction Notes

Note 001 225 SF
Remove and dispose existing Portland Cement Concrete.

Note 002 5 LF
Remove and dispose existing curb to a neat sawcut line.

Note 010 2 EA
Remove and dispose of existing tree.

Note 100 1 LS
Remove and replace existing pedestrian bridge. Pedestrian bridge shall be stored in a safe location until the end of construction. Replace pedestrian bridge at the end of construction per Detail 15, Sheet C4.

Note 102 1 LS
Relocate exposed irrigation line.

Note 106 1 LS
Relocate existing light pole.

Note 201 60 LF
Install Guardrail per MAG Std. Det. 135 at the location shown Per Detail 8, Sheet C4. Guardrail shall be cor-ten Steel with Standard Flared Terminal Section.

Note 202 ~~300~~ 650 LF
Install Handrail per MAG Std. Det. 145 with Type 1 Anchor Plate Detail. Terminate Handrail 3 inches on either side of the pedestrian bridge.

Note 204 200 SF
Construct pedestrian bridge ramp max slope of 8.33% per Detail 15, Sheet C4 and Detail this sheet. Slope landings at 2% toward the street. Ramp construction includes handrail on both sides.

Note 500 325 LF
Construct 15' wide Concrete Channel per Details 2 & 3, Sheet C3, and the structural Details on Sheets S1 and S2. Includes weir construction.

Note 501 1 EA
Construct Type 'E' Catch Basin per MAG Std. Det. 534. Construction includes removal and replacement of existing curb to the nearest construction joint and removal of existing pavement section to a neat saw cut line. Replacement pavement section shall match existing.

Note 502 1 EA
Construct headwall drop inlet per MAG Std. Det. 501-5.

Note 503 7 LF
Install 18" Galvanized spiral ribbed stormdrain. Slope bottom of catch basin to drain to culvert. Connect culvert to proposed channel per Detail 14, Sheet C4.

Note 504 3 EA
Install flap gate at the outlet of pipe per Detail 14, Sheet C4. Flap gate size shall match pipe outlet size.

Note 508 6 LF
Install 12" Galvanized spiral ribbed stormdrain. Slope bottom of catch basin to drain to culvert. Connect culvert to proposed channel per Detail 14, Sheet C4.

~~Note 510 1 EA~~
~~Install slope per MAG Std. Det. 428.~~

Note 512 1 LS
Grade to drain this area Per Grading Detail 6 Sheet C4.

Note 513 1 LS, 280 SF Concrete Match-up.
Grade to drain this area Per Grading Detail 7 Sheet C4.

Note 514 1 LS
Grade to drain this area Per Grading Detail 8 Sheet C4.

Note 516 1 LS, 540 SF Concrete Match-up
Grade to drain this area Per Grading Detail 10 Sheet C4. Includes 4" concrete match-up.

Note 517 1 LS
Grade to drain this area Per Grading Detail 11 Sheet C4.

Note 518 1 LS
Grade to drain this area Per Grading Detail 12 Sheet C4.

Note 525 1 EA
Construct 15" ADS Nyloplast Drain Basin with curb inlet structure and standard H-20 grate. Install single curb behind grate to match existing per MAG Std. Det. 222. Includes 15" ADS HDPE pipe, fittings and connection per Detail 14, Sheet C4. Includes removal and replacement of pavement. Station and offset are to the center of the grate.

Sta:	Offset	Grate	Invert
108+95.22	11.17' RT	3107	3104.13

CALL TWO WORKING DAYS BEFORE YOU DIG 263-8100 OR 1-800-STAKE-IT (OUTSIDE MARICOPA COUNTY)

Revisions:	Date:	By:
Revised Quantity of Handrail - Note 202	—	—
Add Note for Handrail on both sides of both pedestrian ramps. Delete Note 510	1/17/12	R

ARIZONA ENGINEERING
CLIENTS | PEOPLE | PERFORMANCE
GHD
1501 South Yale Street·Suite 101·Flagstaff·AZ·USA·1·928·774·7179·www.ghd.com

Town Of Camp Verde
Finnie Flat Channel Improvements
Base Bid Rectangular Concrete Channel
Sta. 106+00 to 109+25

Sheet	Scale: 1"=20'	Date: JUN 11	Job No: 86-13045
C9 of 13	By: bs/bd/fnc	Ckt: cl	Drawing No: N/A