CAMP VERDE FIRE DISTRICT

FIRE PROTECTION DEVELOPMENT STANDARDS

INTRODUCTION

Pursuant to Section 101 of the International Fire Code, 2012 edition, with local amendments, the following specifications and regulations pertain to the design, construction and installation of built-in fire protection and life safety features required for buildings or property improvements.

These regulations include specifications based on requirements in the International Fire Code, National Fire Protection Association (NFPA) Standards and are intended to reduce ambiguities and confusion due to code interpretations.

These standards are only intended to cover the most frequently used items within the codes and may not be all inclusive. Items such as flammable liquids and hazardous material are so specific to the building or complex being constructed that the code must be referenced in order to determine specific requirements.

Terry Keller, Fire Chief

Kristi Gagnon, Fire Marshal

Adopted 2003 IFC:	January 1, 2007
Effective date:	January 1, 2008
Adopt 2012 IFC	August 21, 2014

CAMP VERDE FIRE DISTRICT

FIRE PROTECTION DEVELOPMENT STANDARDS

Chapter	1	Administrative Rules	Page
	1.00	Definitions	6
	1.01	Submission of Plans	7
	1.02	Action for Approval by the Fire Code Official	8
	1.03	Appeal Procedures	8
	1.04	Inspections and Occupancy	9
	1.05	Required Permits	9
	1.06	Fee Schedule	9
Chapter	2	Buildings Under Construction	
	2.00	Approved Plans	11
	2.01	Water Supply	11
	2.02	Access Roads	11
	2.03	Portable Fire Extinguishers	12
	2.04	Fire Hazard Abatement	12
	2.05	Flammable and Combustible Liquids Storage	12
	2.06	Container and Portable Tank Storage Inside Buildings	12
	2.07	Temporary Tanks for Storage and Use	13
	2.08	Control of Sources of Ignition	13
	2.09	Asphalt Kettles	13
Chapter	3	Fire District Access to Buildings	
	3.01	General Requirements	14
	3.02	Minimum Specifications	14
	3.03	Building Access for Ladder Operations	15

	3.04	Dead-end Fire Apparatus Access Routes	16
	3.05	Permissible Modifications	16
	3.06	Fire Hydrants Along Fire Apparatus Access Routes	17
	3.07	Access to Individual Structures or Tenant Spaces	17
	3.08	Access to Gated Communities, Gated Areas and Mini-Storage Facilities	17
Chapter	**4**	**Addressing**	
	4.01	Address and Premise Identification	18
Chapter	**5**	**Water Supply and Fire Flow**	
	5.01	General Specifications	18
	5.02	Quantity	19
	5.03	Modifications	21
	5.04	Credit for Automatic Sprinkler Protection	21
Chapter	**6**	**Fire Hydrants**	
	6.01	General Specifications	21
	6.02	Protection	22
	6.03	Marking and Clearance	22
	6.04	Hydrant Spacing and Distribution	22
	6.05	Fire Hydrants Along Parkways and Arterials	23
	6.06	Private Fire Hydrants	23
Chapter	**7**	**Automatic Fire Sprinkler and Standpipe Systems**	
	7.01	Standards Established	23
	7.01-4	Existing Buildings	26
	7.02	Submission of Plans	26
	7.03	General Requirements	27
	7.04	Required Plan Submittal Information	27
	7.05	Design Requirements	30

	7.06	Final Approval of System	30
	7.07	Fire Department Connections (FDC)	30
	7.08	Control Valve Signage	31
	7.09	Dry Pipe Performance	31
	7.10	Hydraulically Engineered Sprinkler System	32
	7.11	Sprinkler System Supervision	32
	7.12	Fire Riser Room	32
Chapter	**8**	**Fire Detection and Alarm Systems**	
	8.01	Standards Established	32
	8.02	Submission of Plans	33
	8.03	General Requirements	33
	8.04	Required Plan Submittal Information	33
	8.05	System Monitoring	35
	8.06	Fire Alarm Systems for Existing Buildings	35
Chapter	**9**	**Aboveground Fuel Tank Installation**	
	9.01	General	35
	9.02	Submission of Plans	35
Chapter	**10**	**Miscellaneous Standards**	
	10.01	Standards Established	36
	10.02	Protection of Fuel Gas Equipment	36
	10.03	Spray Booth Construction	37
	10.04	Occupant Load Signs	37
	10.05	No Smoking Signs	38
	10.06	Flammable Liquid Storage Room Drainage	38
	10.07	Commercial Kitchen Hood Extinguishing Systems	38

APPENDICES

Appendix I	**Fire Access Turnaround Detail**	40
Appendix II	**Fire Lane Construction Guidelines**	41
Appendix III	**KNOX Box Locking Devices, FDC Caps, And Key Pads for Gates**	42
Appendix IV	**Gate Key Switch and Post Detail**	43
Appendix V	**Fire Riser and Remote FDC Detail**	44
	Fire Sprinkler Line Sweep Detail	45
	Remote Fire Department Connection (FDC) detail	45

Chapter 1

ADMINISTRATIVE RULES

The following rules, regulations and standards shall be observed in connection with all property improvements within the Camp Verde Fire District where fire protection facilities are required.

Applicable sections of the International Fire Code, 2012 Edition, are referenced at each section by the designation "Ref...".

1.00 Definitions

1.00-1 The following definitions shall apply to these rules, regulations and standards:

a. "**Approved**" shall mean acceptable to the Fire Code Official of the Camp Verde Fire District.

b. "**As-built plans**" or "**record documents**" shall mean drawings, blueprints, sketches or similar renditions, drawn to scale, that accurately reflect the configurations of equipment or a system as it is installed on the premises.

c. "**Fire access route**" shall mean any approved road, street, alley, fire lane or similar roadway that is intended for use by Fire District apparatus.

d. "**Fire Code Official**" shall mean the Camp Verde Fire District Fire Chief or other designated authority charged with the administration and enforcement of the code, or a duly authorized representative.

e. "**Fire flow**" shall mean the quantity and duration of water flow required or available for fire protection in addition to the normal average domestic consumption in the same area.

f. "**Fire protection system or equipment**" shall mean any fire extinguishing system, fire sprinkler system, fire hydrants, fire detection or alarm system, commercial kitchen hood and duct ventilation system designed to detect, control, extinguish or prevent the spread of fire.

g. **"GPM"** shall mean a flow rate measured in gallons per minute.

h. "**NFPA**" shall mean the National Fire Protection Association.

I. **"PSI"** shall mean pressure measured in pounds per square inch.

j. "**IBC**" shall mean the latest edition of the International Building Code that has been adopted by the Town of Camp Verde or Yavapai County.

i. "**IFC**" shall mean the 2012 Edition of the International Fire Code.

j. "**UL**" shall mean Underwriters Laboratories.

k. **"Underground Fire Line"** shall mean the piping coming from the private or municipal water supply to the fire sprinkler riser or other sprinkler apparatus such as remote fire department connections, fire pump and tanks, etc.

1.01 Submission of Plans

1.01-1 Plans for property improvements shall be submitted in accordance with the rules, regulations, and policies of the planning and zoning or building department that has jurisdiction.

A minimum of three sets of building plans and specifications shall be reviewed by the Fire District for compliance with applicable codes and standards. The Fire District shall retain one set and the other two shall be returned to the building department having jurisdiction.

To assist developers, contractors, and/or property owners in designing practical and code compliant buildings, pre-construction meetings may be conducted during the design phase of a project. The purpose of these meetings shall be to clarify code requirements and to find solutions to possible construction problems. These meetings should be scheduled through the building department having jurisdiction.

Plans for built-in fire protection systems shall be submitted directly to the Town of Camp Verde Building Department. These systems include automatic fire sprinklers, standpipes, fire detection and alarm systems, fire extinguishing systems, commercial kitchen suppression systems, and similar equipment designed to detect, control or prevent the spread of fire.

Plans for underground fire lines, remote fire department connections, and similar equipment designed to control or prevent the spread of fire shall be submitted directly to the Fire Prevention Division of Camp Verde Fire District.

1.01-2 Site plans for Fire District review shall include the following information:

a. Location and configuration of the proposed property improvement, showing its relationship to other buildings, property lines, nearest streets, roadways, alleys or Fire District access routes;

b. Location of existing underground water mains, the diameter of those water mains, fire hydrant locations;

c. Location, width, overhead obstructions and construction of all streets, roadways, alleys, bridges, fire lanes or Fire District access routes on the site to be improved;

d. Location of any temporary and/or permanent fences, walls, gates, arches, berms or any other security or ornamental features that may affect Fire District access to and/or on the site during construction and occupancy; and;

e. Location of any unusual or remarkable topographical features, landscaping, vegetation, or other features that may affect Fire District access to and/or on the site during construction and occupancy.

EXCEPTION: When a project developer has submitted a preliminary site plan for review by the Fire Code Official, the Fire Code Official may waive any or all of the above requirements.

1.01-3 When a site plan is not required for a building permit, the Fire Code Official shall be consulted regarding specifications for built-in fire protection facilities.

1.01-4 Plans and specifications (shop drawings and product data) for fixed fire protection systems, including but not limited to, automatic fire sprinkler systems, fire extinguishing systems, fire detection and alarm systems, commercial kitchen suppression systems, fire standpipe systems, underground fire lines, and fire pumps shall be submitted to the Fire Code Official for review and approval prior to installation.

Plans and specifications shall include at least the information specified in the appropriate chapters of these standards, and shall include specifications sheets and manufacturer's catalog displays of all components of the fixed fire protection system and any calculations required.

1.01-5 Additions to an existing fire protection system in buildings requiring plans shall include the existing system in the plans for the new system.

1.02 Action for Approval by the Fire Code Official — Ref.: IFC 105.4

1.02-1 All plans submitted to the Fire Code Official shall be approved, conditionally approved, or rejected.

When approving or conditionally approving a plan, the Fire Code Official shall forward a copy of the conditions to the Building Official and the project representative. A copy of the conditions shall be kept on file at the Fire District.

When rejecting a plan, the Fire Code Official shall forward a copy of the decision to the Building Official, setting forth his reasons for denial. A pre-construction meeting may be conducted to clarify code requirements.

1.03 Appeal Procedures — Ref.: IFC 108

1.03-1 Any administrative decision relating to the requirements for fire protection may be appealed in accordance with the latest edition of the International Fire Code as adopted by the Camp Verde Fire District.

Appeals of administrative decisions relating to requirements for fire protection shall be made in writing to the Camp Verde Fire District Board of Appeals or by calling 928-567-9401 and requesting that a variance request form be mailed or faxed to you. The Board of Appeals may be contacted at the following address:

Camp Verde Fire District Board of Appeals
Fire Prevention Division
Camp Verde Fire District
26B Salt Mine Rd.
Camp Verde, Arizona 86322
Telephone: (928) 567-9401
FAX: (928) 567-2444

1.04 Inspections and Occupancy — Ref.: IFC 106

1.04-1 The developer or contractor shall be responsible for notifying the Camp Verde Fire District's Fire Prevention Division for inspection of all fire protection requirements.

Unless unusual circumstances arise, the developer/contractor shall provide at least twenty-four (24) hours notice to the Fire Prevention Division to arrange an inspection.

In special cases, such as large or unusually complicated fire protection systems, the Fire Code Official may require more than twenty-four (24) hours notice to arrange an inspection.

1.04-2 If, when inspecting or witnessing a test of a fire protection system, the Fire Code Official observes a violation of the building code or construction standards, he shall promptly notify the Building Official and the contractor.

1.04-3 The Fire Code Official shall not approve the occupancy until he is satisfied that the requirements for fire protection have been met, and the actual construction of all fire protection equipment has been completed in accordance with the approved plan, accepted standards, or nationally recognized good practice.

1.04-4 When the Fire Code Official has been notified by the Building Official that a temporary or permanent Certificate of Occupancy may be issued, he shall arrange to have the premises inspected for compliance with the conditions of the International Fire Code and its related standards.

If, at the time of this inspection, requirements specified during the plan review are not completed or other fire safety hazards are identified, the Fire Code Official shall issue a violation notice to the person responsible for the premises. This violation notice shall specify the necessary corrections and shall set forth a deadline for compliance.

1.05 Required Permits and Fees — Ref.: IFC 105

1.05-1 A permit shall be obtained from the Fire Prevention Division of the Camp Verde Fire District prior to commencing any work, activity or operation regulated by the fire code. Applicable permit fees shall also be required.

1.06 Fee Schedule

1.06-1 Plan Review Fees

New Construction, Additions and Alterations	40% of Building Permit Plan Review Fee
Subdivision Plat Review	$60
Fire Alarm Systems	
New Installation up to 5,000 sq. ft.	$150
New Installation 5,000+ sq. ft.	$150 + .01 per sq. ft. over 5,000
Modifications	$75

Fire Suppression Systems

New Installation up to 5,000 sq. ft.	$250
New Installation 5,000+ sq. ft.	$250 + .01 per sq. ft. over 5,000
Modifications	$125
Underground Fire Lines and Remote FDC's	$75
Alternative Extinguishing Systems and Commercial-Type Cooking Equipment,	$100
Pre-Manufactured Spray Booths	$100
Non-Pre-Manufactured Spray Booths	$200
Fire Pumps	$100
Aboveground Fuel Tanks	$100
Fire Department Access	$60 per gate
Solar Photovoltaic Power Systems	$50

1.06-2 Permit Fees

Explosive/Blasting

3 Day Single Project No On-Site Storage	$50
30 Day Single Project No On-Site Storage	$100
Magazine Storage	$100 each site
Fireworks/Pyrotechnics	$50 plus standby fees
Special Event	$50 plus standby fees

Tents, Canopies, Membrane Structures

Single Tent Over 400 sq. ft.	$25
Single Canopy Over 700 sq. ft.	$25
Sites with Multiple Tents And/or Canopies	$50

1.06-3 Other Fees

Additional Plan Review (after 2)	50% of Original Plan Review Fee
Re-Inspection	$50
Penalty for Starting Work Without a Permit	Double the Fee

Chapter 2
BUILDINGS UNDER CONSTRUCTION

2.00 Approved Plans

Ref.: IFC 105

A complete set of Fire District approved plans, including plans for fire protection systems and underground fire lines, shall be available at the job site for review by the Fire Code Official at the time of the requested inspection.

A plan review fee for reviewing and inspecting fire protection systems and underground fire lines shall be charged. The plan review fee shall be paid at the time the plans are submitted for review. See Chapter 1, Section 1.01-6

2.01 Water Supply

IFC Section 3312
IFC Appendix B & C

2.01-1 A water source capable of supplying the required fire flow, either temporary or permanent, shall be made available prior to combustible materials being brought on to the construction site.

Temporary water supply arrangements shall have prior approval of the Fire Code Official. If a municipal or private water service is used, all connections shall have prior approval.

Fire hydrants shall be placed into service prior to combustible materials being brought on the building site or as soon as practical with the Fire Code Official's approval.

Hydrants shall be maintained clear and accessible for fire protection equipment to meet requirements set forth in the plan review by the Fire District.

All fire hydrant installations must be approved and inspected by the Fire District and the appropriate water company having jurisdiction prior to use.

2.02 Access Roads

Ref.: IFC 503

2.02-1 All weather access roadway for use of heavy firefighting apparatus shall be provided to the immediate job site at the start of construction.

The temporary fire access route shall be at least twenty (20) feet in width, shall have an unobstructed vertical clearance of at least thirteen feet, six inches (13' 6"), and shall be capable of supporting the imposed load of fire apparatus weighing up to seventy-five thousand (75,000) pounds.

2.02-2 All temporary fire access routes, where required, shall be maintained until all construction is completed. Permanent fire apparatus access routes shall be completed prior to occupancy.

2.02-3 Arrangements shall be made to assure immediate Fire District access to the site at all times during construction. This may include signage as required by the fire code official.

2.03 Portable Fire Extinguishers — Ref.: IFC 3315

2.03-1 A sufficient number of approved portable fire extinguishers, as specified by the Fire Code Official, shall be provided at the construction site.

The size, type and number of extinguishers shall be based on the relative hazards, the potential for fire spread, and the job site area.

2.03-2 When a construction site mobile office is provided, a minimum of one (1) portable fire extinguisher with a minimum UL classification of 2A-10BC shall be available at that location.

2.04 Fire Hazard Abatement — Ref.: IFC 3304

2.04-1 Excess debris, wrapping paper, wood packing materials, cardboard, insulation and other loose combustible materials shall not be allowed to accumulate inside any building under construction.

Debris that is removed from the building shall be piled or stacked not less than fifty (50) feet from the building or in an approved refuse container at least ten (10) feet from the building.

2.05 Flammable & Combustible Liquids Storage — Ref.: IFC 5706.2

2.05-1 Flammable or combustible liquid containers, and/or liquefied petroleum gas tanks or cylinders shall be removed from the building at the end of each working day, and stored in a secure, detached location away from the building.

> **EXCEPTION**: Small containers where the total capacity of all containers does not exceed ten (10) gallons.

2.05-2 Temporary portable heating appliances shall be turned off at the end of each working day. Section 6103.2.1.2 and NFPA 58.

> **EXCEPTION**: Heaters used for drying newly installed wallboard may be left on provided that all combustibles are located at least ten (10) feet from the unit, and fuel gas cylinders, if used, are adequately secured against tipping over. Heaters used shall be UL listed for this purpose.

2.06 Container & Portable Tank Storage Inside Buildings — Ref.: IFC 3305

2.06-1 Bulk flammable or combustible liquid storage at construction sites shall be in accordance with the International Fire Code and shall meet the approval of the Fire Marshal.

2.06-2 Metal containers having a capacity of not more than sixty (60) gallons may be used for the storage of flammable and combustible liquids at construction sites.

Discharge devices shall not be of a type that develops internal pressure on the container. Pumping devices or approved self-closing faucets used for dispensing liquids shall not leak and shall be well maintained. Individual containers shall not be interconnected and shall be kept closed when not in use.

2.07 Temporary Tanks for Storage and Use of Flammable and Combustible Liquids

Ref.: IFC 5704

2.07-1 Aboveground temporary tanks of between sixty-one (61) and ten thousand (10,000) gallon capacity shall comply with IFC Chapter 57 and with the following:

a. Must go through the permit process with Fire Prevention, including fee.
b. Tanks shall be adequately safeguarded (fence, barrier posts per Code, etc.) from vehicular damage.
c. Tanks shall be adequately safeguarded from tampering when not in use.
d. Smoking or open flames within fifty (50) feet of any tank or product distribution point shall be prohibited.
e. Tanks and containers for the storage of flammable or combustible liquids aboveground shall be conspicuously marked with the product name and "FLAMMABLE - KEEP FIRE AND FLAME AWAY."
f. Tanks shall bear the marking "KEEP 50 FEET FROM BUILDING".
g. Flammable liquids such as gasoline shall not be dispensed by gravity. Dispensing shall be accomplished with an approved pumping device permanently attached to the tank. An effective anti-siphoning device shall be included in the pump discharge unless a self-closing nozzle is provided.
h. A 2A-20BC fire extinguisher shall be available within seventy-five (75) feet of the dispensing device.
i. Diking capable of containing the entire contents of the tank shall be provided around the tanks.
j. Temporary tanks shall be removed at completion of construction.

2.07-2 Temporary electrical wiring may be allowed as long as it is done in accordance with the National Electric Code, nationally recognized good practice, and approval of the Building Official or his designate.

2.07-3 Permit and fee will be required as specified in Chapter 1, Section 1.06.

2.08 Control of Sources of Ignition

Ref.: IFC 3504

Open flame cutting, welding, brazing, or soldering operations shall be conducted with due care to prevent sparks or hot metal from starting fires.

The person performing the operation shall inspect the immediate area after work has stopped to see that no smoldering fires exist.

The person performing the operation shall have a fire extinguisher available nearby.

2.09 Asphalt Kettles

Ref.: IFC 303

Asphalt kettles or trailers used in roofing operations shall comply with the following:

a. Asphalt kettles shall not be used inside of or on the roof of any building.

b. There shall be at least one approved fire extinguisher with a minimum UL classification of 20BC available within thirty (30) feet of each asphalt kettle during such periods when the kettle is in use, and an additional 20BC extinguisher shall be available on the roof. Portable fire extinguishers shall remain unobstructed and clearly visible and maintained in an operable condition at all times.

(**Note**: Charged garden hoses **shall not** be used to meet this requirement.)

c. Asphalt kettles or trailers shall be located as far as practical from any combustible wall or overhang.

Chapter 3
FIRE DISTRICT ACCESS TO BUILDINGS

3.01 General Requirements — Ref.: IFC 503

3.01-1 Every building hereafter constructed shall be accessible to Fire District apparatus by way of an approved access roadway with an all-weather driving surface capable of supporting the imposed load of fire apparatus weighing seventy five thousand (75,000) pounds.

EXCEPTION: When there is not more than two (2) Group R-3, or Group U occupancies, the requirements of this chapter may be modified; provided that, in the opinion of the Fire Code Official, firefighting or rescue operations would not be impaired.

Approved fire apparatus access roads shall be provided when any portion of an exterior wall of the first story of a building is located more than one hundred fifty (150) feet from Fire District vehicle access on a public street as measured by an unobstructed route around the exterior of the building.

More than one fire apparatus access road may be required when it is determined by the Fire Code Official that access by a single road may be impaired by vehicle congestion, condition of terrain, climatic conditions or other factors that could limit access.

Access roadway specifications may be modified if the building is protected by a complete automatic sprinkler system provided the sprinkler system is not otherwise required by the International Fire Code.

3.02 Minimum Specifications — Ref.: IFC 503

3.02-1 Fire apparatus access roads shall be designed and installed to extend to within one hundred fifty (150) feet of all portions of the exterior walls of the first story of any building measured in a route around the exterior of the building.

3.02-2 Permanent fire apparatus access routes shall be constructed to meet the standards of the appropriate road department.

Temporary roads installed during building construction shall comply with the requirements of Chapter 2, Section 2.02 of these Standards.

3.02-3 Fire apparatus access roads shall be a minimum of twenty (20) feet in width, except as modified in Sections 3.03, 3.04 and 3.05 of these standards, and shall have a minimum vertical clearance of thirteen feet, six inches (13' 6").

3.02-4 Dead-end fire apparatus access roads shall be maintained permanently in an unobstructed manner, and shall be subject to frequent inspection by the Fire District. Removal of obstructing material shall be at the owner's expense.

3.02-5 Fire apparatus access roads with a width of only twenty (20) feet shall be marked with permanent "NO PARKING -- FIRE LANE -- BY ORDER OF THE FIRE MARSHAL" signs. Signs shall measure twelve by eighteen (12x18) inches, have red letters on a white background, and shall comply with Federal Department of Transportation Standards for R8-31 signs as illustrated below:

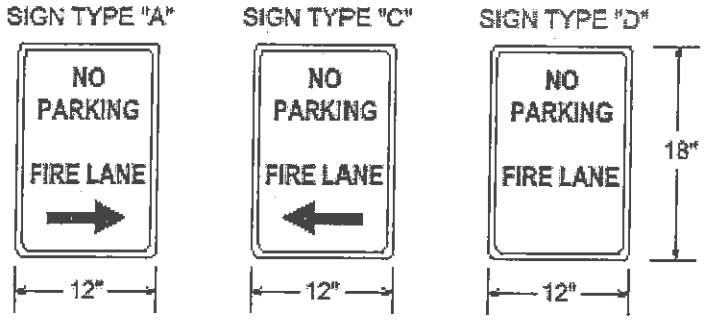

Signs shall be installed at the entrance to the fire apparatus access route and at intervals determined by the Fire Code Official.

3.02-6 Fire apparatus access roads shall not exceed *10* percent grade. The fire code official may permit the access road grade to increase, but shall not exceed 13 percent if fire sprinkler protection is installed.

The angle of departure (break over angle) for road and driveway intersections or crossings shall not exceed twelve (12) degrees.

3.02-7 The minimum turning radii for all turns shall be twenty-eight (**28**) feet inside turning radius and fifty (**50**) feet outside turning radius.

3.03 Building Access for Ladder Operations — Ref.: IFC Appendix D105

3.03-1 Buildings more than two (2) stories in height shall be designed in such a manner that access to the interior of the building can be accomplished from the same side of the building as the fire apparatus access route.

3.03-2 Buildings or portions of buildings exceeding thirty (30) feet in height from the lowest point of Fire District vehicle access shall be provided with a fire access route capable of accommodating Fire District aerial apparatus.

Access roadways required for ladder operations shall be a minimum of twenty-six (26) feet in width in the immediate vicinity of any building or portion of building more than thirty (30) feet in height above the lowest level of fire department vehicle access.

At least one of the required access roadways meeting this condition shall be located within a minimum of fifteen (15) and a maximum of thirty (30) feet from the building, and shall be positioned parallel to one entire side of the building, on the long side.

> **Note:** The measurement for this requirement shall be taken from the exterior wall of the building to the nearest edge of the fire apparatus access road.

3.04 Dead-end Fire Apparatus Access Routes — Ref.: IFC Appendix D

3.04-1 Dead-end fire apparatus access roads shall meet the requirements of the following Table 3.04:

REQUIREMENTS FOR DEAD-END FIRE APPARATUS ACCESS ROADS

LENGTH (feet)	WIDTH (feet)	TURNAROUNDS REQUIRED
0 – 150	20	None required
151-500	20	120-foot Hammerhead, 60-foot "Y" or 96-foot-diameter cul-de-sac in accordance with Figure D103.1 (Appendix 1)
501-750	26	120-foot Hammerhead, 60-foot "Y" or 96-foot-diameter cul-de-sac in accordance with Figure D103.1 (Appendix 1)
Over 750	Special approval required	

*Curves and topographical conditions may alter the requirements for turnarounds and the width of access roads.

3.04-2 The drawings in Appendix D of these standards illustrate approved fire apparatus access road turnarounds.

3.05 Permissible Modifications — Ref.: IFC 503

3.05-1 When the building or buildings are outfitted with a complete automatic sprinkler system, the Fire Code Official may authorize modification of the full standard fire apparatus access road and/or turnarounds.

3.05-2 When the building or complex of buildings to be served is protected by a complete automatic sprinkler system, the access road may be greater than 150' in length and the maximum length shall be determined by the Fire Code Official.

3.05-3 When proximity to property lines or other obstructions prevents the installation of cul-de-sacs or hammerheads on the end of a fire access route in excess of five hundred (500) feet in length, the Fire Code Official may allow multiple fire apparatus turnarounds along the fire access route.

3.06 Fire Hydrants Along Fire Apparatus Access Roads

Ref.: IFC 503
IFC Appendix C

3.06-1 An all-weather surface access to fire hydrants shall be maintained to accommodate the necessary firefighting apparatus.

3.06-2 Hydrant spacing and distribution along fire apparatus access roads shall be as specified in Chapter 6, Section 6.04 of these Standards.

3.07 Access to Individual Structures or Tenant Spaces

Ref.: IFC 506

3.07-1 When a property within the Fire District is protected by an automatic fire alarm system or a fire sprinkler system, a KNOX key box approved by the Fire Code Official shall be installed on the property in a location approved by the Fire Marshal. Residential property shall be exempt from this requirement. Such boxes shall contain the following.

a. Keys to locked points of egress whether on the exterior or interior of the building.

b. The keys to any room in which the fire alarm panel or fire sprinkler system riser may be located.

c. Keys to other areas as directed by the Fire Marshal.

d. The keys that operate the elevator recall and emergency override systems.

e. When electronic locks are employed, the key box shall contain a copy of the appropriate codes that provide access.

EXCEPTION: Buildings that are staffed at all times by persons possessing keys to the areas specified in Section 3.07-1.

The Fire Chief may specify more than one key box be installed on a building. Where factors require multiple key boxes or alternate locations, the Fire Marshal or his designate shall specify those locations.

Key boxes may be purchased from an approved company as specified in Appendix III. If only one key box is required, it shall be installed adjacent to the main entrance. It shall be clearly visible and mounted at minimum height of five feet (5') from grade or a maximum height of six feet (6') from grade.

All keys shall be clearly marked to indicate the door, room, area or lock they serve.

3.08 Access to Gated Communities, Gated Areas, and Mini-Storage Facilities

Ref.: IFC 503

3.08-1 All subdivisions, communities and mini-storage facilities in the Camp Verde Fire District that install gates or other approved barricade methods to prevent and/or control access shall provide an approved Knox Key System for fire district access. Gates shall be electric and shall be provided with approved preemption controls, a KNOX key switch and a manual release. The emergency key

switch shall be mounted on a 5 ½ foot pedestal per CVFD specifications. See Appendix IV for detail.

Key switches, padlocks, and boxes may be purchased from an approved company as specified in Appendix III.

Chapter 4
ADDRESSING

4.01 <u>Address and Premise Identification</u> **Ref.: IFC 505**

4.01-1 Approved address numbers shall be placed on all new and remodeled buildings, including one- and two-family dwellings, in such a position as to be plainly visible and legible from the road or street fronting the property.

> **Note:** Address assignments are made by the appropriate Planning and Zoning Departments.

4.01-2 Address numbers or letters shall face the street from which the building is addressed and shall be a minimum of six (6) inches in height and shall contrast with their background. The principal stroke of address numbers shall be a minimum of one-half (1/2) inch. Numbers may be required to be larger as determined by the Fire Code Official.

When address numbers are located on clear glazing such as on doors or windows, the numbers shall be white to achieve contrast during all lighting conditions.

4.01-3 Where the building is not visible from the street or more than one building is on a site, such as a building on a long driveway or private roadway, provision shall be made to clearly identify which driveway or roadway serves the appropriate address at the entrance to the driveway or roadway.

4.01-4 Each suite or unit shall be separately identified and the unit numbers shall be a minimum of four (4) inches high and having a principal stroke of one-half (1/2) inch in width. The numbers shall be prominently displayed at the front and rear access doors. Numbers may be required to be larger as determined by the Fire Code Official.

Chapter 5
WATER SUPPLY AND FIRE FLOWS

5.01 <u>General Specifications</u> **Ref.: IFC 507**
IFC 903
IFC Appendix B

5.01-1 Fire District hose connections and control valves used in connection with fire protection facilities shall be installed at locations and to the specifications approved by the Fire Code Official.

5.01-2 All required fire flows, either temporary or permanent, shall be available at a minimum residual pressure of twenty (20) psi.

5.01-3 Per Table B 105.1, any building or subdivision in the fire district shall meet fire flows. The requirement may be met by fire hydrant(s), and fire sprinkler system.

5.02 Quantity

Ref.: IFC Appendix B

5.02-1 The required quantity of water shall be equal to the calculated fire flow for the greatest hazard or protected risk in the proposed development, and shall be based on a minimum demand as required by Table B 105.1.

5.02-2 Where the existing fire flow on a system is inadequate, or a new system is proposed, engineering design calculations to verify fire flow availability shall be provided to the Fire District by the developer.

5.02-3 Required fire flow for buildings shall be determined by the Fire Code Official using Table B 105.1.

TABLE B105.1
MINIMUM REQUIRED FIRE-FLOW AND FLOW DURATION FOR BUILDINGS

FIRE-FLOW CALCULATION AREA (square feet)					FIRE-FLOW (gallons per minute)[b]	FLOW DURATION (hours)
Type IA and IB[a]	Type IIA and IIIA[a]	Type IV and V-A[a]	Type IIB and IIIB[a]	Type V-B[a]		
0-22,700	0-12,700	0-8,200	0-5,900	0-3,600	1,500	2
22,701-30,200	12,701-17,000	8,201-10,900	5,901-7,900	3,601-4,800	1,750	
30,201-38,700	17,001-21,800	10,901-12,900	7,901-9,800	4,801-6,200	2,000	
38,701-48,300	21,801-24,200	12,901-17,400	9,801-12,600	6,201-7,700	2,250	
48,301-59,000	24,201-33,200	17,401-21,300	12,601-15,400	7,701-9,400	2,500	
59,001-70,900	33,201-39,700	21,301-25,500	15,401-18,400	9,401-11,300	2,750	
70,901-83,700	39,701-47,100	25,501-30,100	18,401-21,800	11,301-13,400	3,000	3
83,701-97,700	47,101-54,900	30,101-35,200	21,801-25,900	13,401-15,600	3,250	
97,701-112,700	54,901-63,400	35,201-40,600	25,901-29,300	15,601-18,000	3,500	
112,701-128,700	63,401-72,400	40,601-46,400	29,301-33,500	18,001-20,600	3,750	
128,701-145,900	72,401-82,100	46,401-52,500	33,501-37,900	20,601-23,300	4,000	4
145,901-164,200	82,101-92,400	52,501-59,100	37,901-42,700	23,301-26,300	4,250	
164,201-183,400	92,401-103,100	59,101-66,000	42,701-47,700	26,301-29,300	4,500	
183,401-203,700	103,101-114,600	66,001-73,300	47,701-53,000	29,301-32,600	4,750	
203,701-225,200	114,601-126,700	73,301-81,100	53,001-58,500	32,601-36,000	5,000	
225,201-247,700	126,701-139,400	81,101-89,200	58,501-65,400	36,001-39,600	5,250	
247,701-271,200	139,401-152,600	89,201-97,700	65,401-70,600	39,601-43,400	5,500	
271,201-295,900	152,601-165,500	97,701-106,500	70,601-77,000	43,401-47,400	5,750	
295,901-Greater	165,501-Greater	106,501-115,800	77,001-83,700	47,401-51,500	6,000	
—	—	115,801-125,500	83,701-90,600	51,501-55,700	6,250	
—	—	125,501-135,500	90,601-97,900	55,701-60,200	6,500	
—	—	135,501-145,800	97,901-106,800	60,201-64,800	6,750	
—	—	145,801-156,700	106,801-113,200	64,801-69,600	7,000	
—	—	156,701-167,900	113,201-121,300	69,601-74,600	7,250	
—	—	167,901-179,400	121,301-129,600	74,601-79,800	7,500	
—	—	179,401-191,400	129,601-138,300	79,801-85,100	7,750	
—	—	191,401-Greater	138,301-Greater	85,101-Greater	8,000	

For SI: 1 square foot = 0.0929 m2, 1 gallon per minute = 3.785 L/m, 1 pound per square inch = 6.895 kPa.
a. Types of construction are based on the *International Building Code*.
b. Measured at 20 psi residual pressure.

Note 1 For fire areas that are between the ranges listed on this Table, the fire flow shall be averaged between the low and high number.

Note 2 In Types IA and IB construction, only the three largest successive floor areas shall be used.

Note 3 For buildings protected by approved sprinkler systems, see Section 5.04.

5.02-4 Area separation walls, without openings designed and constructed in compliance with the IFC shall be considered as dividing a building into separate fire areas for the purpose of determining required fire flow that is available for fire fighting. See IFC Appendix B, Section B102 Definitions and Section B104.2 Area Separation.

5.02-5 The required fire flow for occupancies other than buildings shall be determined by the Fire Chief based on sound engineering principles, nationally recognized good practice, and such factors as topography, Fire District access for fire suppression, the nature of the occupancy and its fire hazards, and the type and nature of built-in fire protection features.

5.02-6 The minimum required fire flow for any newly developed area shall be as follows:

One- and two-family unit developments	1000 gpm*
Commercial developments	1500 gpm*

*Gallons per minute at twenty (20) psi for a two (2) hour duration.

Exception: Water systems in commercial developments unable to supply minimum requirements may request a variance from the Fire Code Official.

Exception: The Fire Code Official may allow fire flows in isolated residential developments to be met by requiring fire sprinklers in all buildings and residences when fire flows cannot be met by water storage and fire hydrants.

Note: The required fire flow for any one building or occupancy within that area may exceed these minimums. Care should be taken in designing the water supply system to meet the anticipated demand specified by the Table in Section 5.02-3.

5.02-7 The delivery of the required fire flow by private water systems is permissible, provided that:

a. The design and installation are based on sound engineering principles and nationally recognized good practice. NFPA Standard 24, Current Edition, "Standard for the Installation of Private Fire Service Mains and Their Appurtenances," shall be used.

The system shall be designed and engineered to meet the required fire flows as established by the Fire Code Official. Engineering calculations to verify the anticipated flows shall be submitted at the time of plan review.

b. Provisions shall be made to keep reservoirs and tanks full and in a ready condition at all times utilizing a float system and back up generators.

c. The water supply shall be capable of delivering the required fire flow as required by the Table in Section 5.02-3.

5.03 Modifications

Ref.: IFC B103 & Table B105.1

5.03-1 Required fire flows **may be modified upward** where conditions indicate an unusual susceptibility to group fires or conflagrations or as specified below.

Fire-flow requirements **may be modified downward** for an isolated building or group of buildings in rural areas or in small communities where the development of full fire flow requirements is impractical.

5.03-2 After the modifications as specified in this section have been computed, refer to Sections 5.04 for permissible modifications based on the installation of automatic fire sprinkler and/or automatic smoke detection systems.

5.04 Credit for Automatic Sprinkler Systems

Ref.: IFC Table B105.1

5.04-1 Fire flow credit for automatic sprinkler protection shall be granted only when the structure is protected by an approved automatic sprinkler system.

> **EXCEPTION**: Systems installed in compliance with NFPA Standard 13D shall not be recognized for the purposes of calculating required fire flow unless the system provides total coverage of enclosed occupied areas.

Where sprinklers are installed solely for the purpose of area or height increases as specified in the International Fire Code, the Fire Code Official may grant credit for those systems toward the fire flow requirement.

5.04-2 Fire flows specified in Section 5.02-3 may be reduced by 75% for commercial occupancies when the building is provided with an approved automatic sprinkler system. The resulting fire flow shall not be less than fifteen hundred (1500) GPM.

Chapter 6
FIRE HYDRANTS

6.01 General Specifications

Ref.: IFC 507
Table C105.1

6.01-1 Fire hydrants shall be installed in accordance with Fire District and the local water company requirements.

6.01-2 Fire hydrant placement and quantity shall be determined by the Fire Code Official.

6.02 Protection

Ref.: IFC 507
IFC 312

6.02-1 When required by the Fire Code Official, fire hydrants that are exposed to vehicular damage shall be protected by appropriate guard posts or other approved means. Acceptable protection shall consist of guard posts installed in the following manner:

1. Guard posts shall be constructed of steel not less than four (4) inches in diameter and shall be concrete filled.

2. Guard posts shall be set not less than three (3) feet deep in a concrete footing of not less than a fifteen (15) inch diameter.

3. Guard posts shall be set with the top of the posts not less than three (3) feet above ground.

4. Guard posts shall be located a minimum of three (3) feet from the hydrant and shall be located no more than four (4) feet apart.

5. Guard posts shall not interfere with the use or operation of the fire hydrant. The number of posts provided shall be sufficient to adequately protect the hydrant.

6.03. Marking and Clearance

Ref.: IFC 507

6.03-1 When required by the Fire Code Official, paved areas within the vicinity of a hydrant shall be permanently marked by painting the curb red, striping, or signage.

When special circumstances occur, the Fire Code Official may specify a minimum "NO PARKING" perimeter to be permanently marked around a hydrant.

6.04 Hydrant Spacing and Distribution

Ref.: IFC Appendix C

6.04-1 Fire hydrants shall be installed per fire flow and spacing requirements specified for the type of development and in accordance with Table C105.1 unless otherwise modified by the Chief or his designate:

TABLE C105.1
NUMBER AND DISTRIBUTION OF FIRE HYDRANTS

FIRE-FLOW REQUIREMENT (gpm)	MINIMUM NUMBER OF HYDRANTS	AVERAGE SPACING BETWEEN HYDRANTS[a,b,c] (feet)	MAXIMUM DISTANCE FROM ANY POINT ON STREET OR ROAD FRONTAGE TO A HYDRANT[d]
1,750 or less	1	500	250
2,000-2,250	2	450	225
2,500	3	450	225
3,000	3	400	225
3,500-4,000	4	350	210
4,500-5,000	5	300	180
5,500	6	300	180
6,000	6	250	150
6,500-7,000	7	250	150
7,500 or more	8 or more[e]	200	120

For SI: 1 foot = 304.8 mm, 1 gallon per minute = 3.785 L/m.
a. Reduce by 100 feet for dead-end streets or roads.
b. Where streets are provided with median dividers which can be crossed by fire fighters pulling hose lines, or where arterial streets are provided with four or more traffic lanes and have a traffic count of more than 30,000 vehicles per day, hydrant spacing shall average 500 feet on each side of the street and be arranged on an alternating basis up to a fire-flow requirement of 7,000 gallons per minute and 400 feet for higher fire-flow requirements.
c. Where new water mains are extended along streets where hydrants are not needed for protection of structures or similar fire problems, fire hydrants shall be provided at spacing not to exceed 1,000 feet to provide for transportation hazards.
d. Reduce by 50 feet for dead-end streets or roads.
e. One hydrant for each 1,000 gallons per minute or fraction thereof.

6.05 Fire Hydrants Along Parkways and Arterials — Ref.: IFC Appendix C

6.05-1 Notwithstanding the hydrant spacing requirements of this chapter, when a project site is located across a parkway or primary arterial, hydrants shall be located on the same side of the parkway or arterial as the project if required by the Fire Code Official.

6.06 Private Fire Hydrants — Ref.: IFC 507

Private fire hydrants shall be installed and maintained according to the Camp Verde Fire District, National Fire Protection Association Standard (NFPA) 24, and the local water company.

Chapter 7
AUTOMATIC FIRE SPRINKLER AND STANDPIPE SYSTEMS

7.01 Standards Established — Ref.: IFC 903

7.01-1 All automatic fire sprinkler systems and standpipe systems shall be designed, installed, and tested in compliance with the 2012 International Fire Code with local amendments, the current editions of the appropriate NFPA Standards; and as specified in the following subsections of this standard.

7.01-2 Appropriate provisions shall be made to prevent contamination of potable water supplies by installing appropriate devices on the fire protection service line as required and approved by the local water company having jurisdiction.

7.01-3 Automatic sprinkler systems are required in the following occupancies:

Group A-1, A-3, A-4 occupancies:

1. The fire area exceeds 12,000 square feet.
2. The fire area has an occupant load of 300 or more.
3. The fire area is located on a floor other than a level of exit discharge serving such occupancies.
4. The fire area contains a multitheater complex (Group A-1 only).

Group A-2 occupancies:

1. The fire area exceeds 5,000 square feet.
2. The fire area has an occupant load of 100 or more.

3. The fire area is located on a floor other than a level of exit discharge serving such occupancies.

Group A-5 occupancies:

1. Concession stands, retail areas, press boxes and other accessory use area in excess of 1,000 square feet.

Ambulatory care facilities:

1. Four or more care recipients are incapable of self-preservation, whether rendered incapable by staff or staff has accepted responsibility for care recipients already incapable.
2. One or more care recipients that are incapable of self-preservation are located at other than the level of exit discharge serving such a facility.

Group E occupancies:

1. Throughout all Group E fire areas greater than 12,000 square feet in area.
2. Throughout every portion of educational buildings below the lowest level of exit discharge serving that portion of the building.

   Exception: An automatic sprinkler system is not required in any area below the lowest level of exit discharge serving that area where every classroom throughout the building has at least one exterior exit door at ground level.

Group F-1 occupancies:

1. A Group F-1 fire area exceeds 12,000 square feet.
2. A Group F-1 fire area is located more than three stories above grade plane.
3. The combined area of all Group F-1 fire areas on all floors, including any mezzanines, exceeding 24,000 square feet.
4. A Group F-1 occupancy used for the manufacture of upholstered furniture or mattresses exceeds 2,500 square feet.
5. A Group F-1 fire area that contains woodworking operations in excess of 2,500 square feet in area which generate finely divided combustible waste or which use finely divided combustible materials.

Group H occupancies:

1. All Group H occupancies.

Group I occupancies:

1. In all Group I occupancies.
2. An automatic sprinkler system is not required where day care facilities are at the level of exit discharge, where every room where care is provided has a least one exterior exit door.
3. In buildings where Group I-4 day care is provided on levels other than the level of exit discharge, an automatic fire sprinkler system shall be installed on the entire floor where care is provided and all floors between the level of care and the level of exit discharge,

all floors below the level of exit discharge, other than areas classified as an open parking garage.

Group M occupancies:

1. A Group M fire area exceeds 12,000 square feet.
2. A Group M fire area is located more than three stories above grade plane.
3. A Group M occupancy used for the display and sale of upholstered furniture or mattresses exceeds 5,000 square feet.
4. In all buildings of Group M where storage of merchandise is in high-piles or rack storage arrays.

Group R occupancies:

1. All Group R occupancies.

   Exceptions: Group R-3 one and two family dwellings, occupied as single family units, unless more than two stories above grade.

Group S-1 occupancies:

1. A Group S-1 fire area exceeds 12,000 square feet.
2. A Group S-1 fire area is located more than three stories above grade plane.
3. The combined area of all Group S-1 fire areas on all floors, including any mezzanines, exceeds 24,000 square feet.
4. A Group S-1 fire area used for the storage of commercial trucks or buses where the fire area exceeds 5,000 square feet.
5. A Group S-1 occupancy used for the storage of upholstered furniture or mattresses exceeds 2,500 square feet.

Repair Garages:

1. Buildings having two or more stories above grade plane, including basements, with a fire area containing a repair garage exceeding 10,000 square feet.
2. Buildings no more than one story above grade plane, with a fire area containing a repair garage exceeding 12,000 square feet.
3. Buildings with repair garages servicing vehicles parked in basements.
4. A Group S-1 fire area used for the repair of commercial trucks or buses where the fire area exceeds 5,000 square feet.

Bulk Storage of Tires:

1. Buildings and structures where the area for the storage of tires exceeds 20,000 cubic feet.

Group S-2 enclosed parking garages:

1. Where the fire area of the enclosed parking garage exceeds 12,000 square feet.
2. Where the enclosed parking garage is located beneath other groups.
   Exceptions: Enclosed parking garages located beneath Group R-3 occupancies.
3. Buildings used for storage of commercial trucks or buses where the fire area exceeds 5,000 square feet.

Specific buildings areas and hazards:

1. Buildings where the floor area exceeds 1,500 square feet and where there is not provided at least one approved exterior wall opening.
2. Where any portion of a basement is located more than 75 feet from openings required by IFC Section 903.2.11.1, or where walls, partitions or other obstructions are installed that restrict the application of water from hose streams, the basement shall be equipped throughout with an approved automatic sprinkler system.
3. Rubbish and linen chutes.
4. Buildings with a floor level having an occupant load of 30 or more that is located 55 feet or more above the lowest level of fire department vehicle access.
   Exceptions: Airport control towers, open parking structures, and occupancies in Group F-2.
5. Where required by the International Mechanical Code, automatic sprinklers shall be provided in ducts conveying hazardous exhaust, flammable or combustible materials.
6. Commercial cooking operations
7. Certain buildings and areas indicated in IFC Table 903.2.11.6.

7.01-4 Automatic sprinkler systems are required in the following ***existing*** occupancies:

1. Building Addition. A sprinkler system is required when any addition increases the total floor area to exceed the square footage requirement.

2. Change of Use. A sprinkler system is required when any change of use or occupancy occurs to a portion of the building to a more hazardous occupancy and the total floor area exceeds the square footage requirement or as determined by the Fire Code Official.

3. Group A-1, A-3, and A-4 Addition. A sprinkler system is required when any addition to existing assembly occupancies increases the occupant load to more than 300.

4. Group A-2 Addition. A sprinkler system is required when any addition to existing assembly occupancies increases the occupant load to more than 100.

5. Group R-3 Care Facilities. A sprinkler system is required in a single-family residence wherein **six** or more persons receive care.

6. Vacant Buildings. A sprinkler system is required when any A, E, or I occupancy that has been vacant for more than 18 months requests to resume as the same occupancy classification and exceeds the square footage or occupant load requirement.

7. Fire Wall Breech. A sprinkler system is required when any modification or alteration to an existing building, with a total floor area that exceeds the square footage breeches or removes a required fire rated wall assembly.

7.02 Submission of Plans

Ref.: IFC 901

7.02-1 Plans for all sprinkler and standpipe systems shall be submitted for review as specified in Chapter 1, Section 1.01-4 of these standards and shall include the information specified in this chapter.

Fire sprinkler plans and hydraulic calculations shall require an engineer's stamp of approval or a minimum NICET Level III stamp of approval prior to being submitted for review.

Exception:

1. Fire Sprinkler Plans for high-piled combustible storage occupancies shall require a registered fire protection engineer stamp
2. High-piled storage occupancies shall submit a plan showing the location of the different classifications of commodities.
3. High-piled storage areas shall require identification of High Piled Storage Sprinkler System Capabilities and Limitations. (Contact CVFD for labeling requirements.)

7.02-2 A plan review fee shall be charged for reviewing all fire protection systems. The plan review fee shall be paid at the time the plans are submitted for review.

7.03 General Requirements — Ref.: IFC 901 & NFPA

7.03-1 Fire sprinkler systems, standpipe systems, and underground piping shall only be installed by trained, qualified, and responsible contractors.

7.03-2 All equipment, devices, piping, fittings, etc. shall be listed or approved by Underwriters Laboratories, Underwriters Laboratories Canada, Canadian Standards Association and/or Factory Mutual and shall be approved for the purpose for which they are intended. No person shall perform any type of modification to any system which would void its listing.

7.03-3 The International Fire Code requires that Fire Department Connections be maintained in an operative condition at all times. Fire Department Connections shall be required by the Fire Marshal to have a locking cap on the connection. Existing Fire Department Connections with continual tampering problems may also be required to have locking caps. See IFC 912.

Locking caps order forms may be obtained through the Camp Verde Fire District Administration Office.

7.03-4 The International Fire Code requires that all fire hydrant systems, fire-extinguishing systems (including automatic sprinklers), wet and dry standpipes, basement inlet pipes and other fire-protection systems and appurtenances thereto shall meet the approval of the Fire District as to installation and location and shall be subject to such periodic tests as required by the Chief or his designate. **Plans and specifications shall be submitted to the Fire District for review and approval prior to installation.**

7.04 Required Plan Submittal Information

The following information shall be included on all working plans submitted to the Fire District for review.

7.04-1 Underground Piping

Underground piping systems shall be designed and installed according to the current edition of NFPA 24. Plans shall be submitted for approval prior to installation. A site plan shall be approved

by the authority having jurisdiction in every case where new private fire service mains are contemplated.

The plan shall be drawn to scale and shall include all essential details including, but not limited to:

1. Business or building owner name.
2. Job site address.
3. Size and location of water source.
4. Size and location of all underground piping.
5. Size, type, and location of valves, meters, and regulators.
6. Size and location of hydrants, showing size and number of outlets.
7. Sprinkler and standpipe risers to be supplied with the system.
8. Location of fire department connections.
9. Thrust blocks (kickers) locations.
10. Plan review fee per current fee schedule.

A visual inspection and pressure test shall be required prior to covering the underground line. Full orifice flushing of the pipe is also required and shall be witnessed by Camp Verde Fire District prior to acceptance. NFPA "Contractor's Material and Test Certificate for Underground Piping" certificates shall be submitted to Camp Verde Fire District for the underground piping upon completion of the underground piping inspection, 200-psi test, and flushing of the piping.

7.04-2 Sprinkler Systems

Sprinkler systems shall be designed and installed according to the current edition of NFPA 13, 13D, or 13R.

The plan shall be drawn to scale and shall include all essential details including, but not limited to:

1. Business or building owner name.
2. Job site address.
3. Ceiling construction:
4. Full height cross section of building.
5. Location of fire walls.
6. Location of partitions.
7. Intended occupancy of each area or room.
8. Any questionable small enclosures in which no sprinklers are installed.
9. Size of city water main and current flow test results.
10. Other sources of water supply, with pressure or elevation.
11. Make, type and nominal orifice size of sprinklers.
12. Temperature rating and location of high temperature sprinklers.
13. Total area protected by each system on each floor.
14. Number of sprinklers on each riser per floor.
15. Make, type, model and size of alarm or dry-pipe valve.
16. Make, type, model and size of pre-action or deluge valve.
17. Type and location of alarm bells.
18. Total number of sprinklers on each dry-pipe system, pre-action system, combined dry-pipe/pre-action system or deluge system.
19. Approximate capacity in gallons of dry-pipe systems.
20. Pipe material type and schedule of wall thickness.
21. Nominal pipe size and center-to-center pipe length dimensions.
22. Type and locations of hangers and sleeves.

23. All control valves, check valves, drains, and test valve connections.
24. Size and locations of hand hose outlets and related equipment.
25. Underground pipe size, length, location, material and point of connection to city main; type of valves and meters. (Unless previously submitted and approved).
26. Provision for flushing the sprinkler system.
27. When the equipment is to be installed as an addition to an existing system, the existing system shall be indicated on the plans to make all conditions clear.
28. For hydraulically designed systems, the materials used are to be included on the hydraulic data nameplate.
29. Contractor's name, address, telephone number, and license number.
30. Details of freeze protection.
31. Design area.
32. Remote Inspectors test valve.
33. Specification sheets for all devices.
34. Engineer's stamp or NICET Level III certification. See section 7.05
35. Plan review fee per current fee schedule.

Hydraulic calculation summary sheets must contain the minimum following information, when applicable:

1. Date.
2. Location.
3. Name of owner and occupant.
4. Building number or other identification.
5. Description of hazard.
6. Name and address of contractor or designer.
7. Name of approving agency.
8. System design requirements.
    a. Design area of water application in square feet.
    b. Minimum rate of water application (density) in gpm per square foot.
    c. Area per sprinkler in square feet.
9. Total water requirements as calculated including allowance for inside hose and outside hydrants.

Hydraulic calculation worksheets must contain the following information:

1. Sheet number.
2. Sprinkler description and discharge constant (K).
3. Hydraulic reference points.
4. Flow in gpm.
5. Pipe size.
6. Pipe lengths, center-to-center of fittings.
7. Equivalent pipe lengths for fittings and devices.
8. Friction loss in psi per foot of pipe.
9. Total friction loss between reference points.
10. Elevation head in psi between reference points.
11. Required pressure in psi at each reference.
12. Velocity pressure and normal pressure if included in calculations.
13. Notes to indicate starting points, reference to other sheets, or to clarify data shown.
14. Sketch to accompany gridded system calculations to indicate flow quantities and directions for lines with sprinklers operating in remote area.

7.05 Design Requirements

The Arizona Board of Technical Registration has reaffirmed its decision that the design of fire protection systems constitutes the practice of engineering and will require all sprinkler plans to bear the seal of an Arizona State registered engineer or architect.

1. Engineer's/Architects Seal
2. A minimum NICET Level III may design and stamp the plans and shall provide their certification.

7.06 Final Approval of System

Ref.: IFC 901

1. Provide all NFPA contractor material and test certificates.
2. Provide a set of "As-Built" plans and calculations (if needed) for all changes made in the system during construction prior to asking for a final inspection.
3. Conduct and pass all appropriate flow and alarm tests.

7.07 Fire Department Connections (FDC)

Ref.: IFC 912
NFPA 13

7.07-1 The fire department connection (FDC) shall be outfitted with two and one-half inch (2-1/2") female couplings with **National Standard** threads or as required by NFPA.

The FDC shall be arranged to face the street, driveway or fire access route as specified by the Fire Code Official. A working space of not less than 36 inches in width, 36 inches in depth and 78 inches in height shall be provided and maintained in front of and around FDC.

Fire department connections shall be arranged so the lowest point on the inlet connection is between twenty-four (24) and forty-two (42) inches above finished grade at its location.

Locking FDC caps shall be required. IFC Section 912.3.1

7.07-2 Fire department connections shall not be located more than one hundred (100) feet from the access roadway. An alarm bell shall be located above the FDC whenever practical, as well as signage noting "Fire Department Connection" or "FDC".

7.07-3 Where fire department hose connections are subject to obstruction or vehicular damage, they shall be protected by guard posts as follows:

1. Guard posts shall be constructed of steel pipe not less than four (4) inches in diameter and shall be concrete filled.

2. Guard posts shall be set not less than three (3) feet deep in a concrete footing of not less than a fifteen (15) inch diameter.

3. Guard posts shall be set with the top of the posts not less than three (3) feet above ground.

4. Guard posts shall be located a minimum of three (3) feet from the fire department hose connection and shall not interfere with operation of the threaded swivel

connections. The number of posts provided shall be sufficient to protect the hose connection

5. Guard posts shall be spaced no more than four (4) feet apart.

7.07-4 All fire department hose connections shall be outfitted with a clapper or check valve for each hose connection.

7.07-5 The size of the fire department connection for supply shall be equal to the size of the sprinkler or standpipe riser to a maximum six (6) inch diameter.

7.07.6 When a building is served by multiple fire department connections, each connection shall be provided with an approved sign detailing the area of the building served by each connection.

On buildings or structures with multiple risers supplied by a single main, the size of the fire department hose connection for supply shall be equal to the largest riser to a maximum six (6) inch diameter.

> **EXCEPTION 2**: Sprinkler systems in one- and two-family dwellings installed under the provisions of NFPA Standard 13D shall be installed as specified in that standard as a minimum.

7.08 Control Valve Signage — Ref.: NFPA 13

7.08-1 Outside alarm bells or gongs for fire sprinkler systems shall be provided with signs as shown below. Letters and numbers shall be red, one inch (1") in height and shall be on a white background.

SPRINKLER
FIRE ALARM
WHEN BELL RINGS
CALL 9-1-1

7.08-2 When the sprinkler or wet standpipe system riser is located in a room, closet or other enclosed space, the outside of the door shall have a sign that reads "Fire Sprinkler Control" or Standpipe Control." Letters shall be at least one (1) inch in height and shall contrast to their background.

7.9 Dry Pipe Performance — Ref.: NFPA 13

7.9-1 Regardless of system piping capacity, dry pipe sprinkler systems shall be capable of delivering water to the inspector's test valve within sixty (60) seconds of the valve being opened. Approved quick opening devices may be used to meet this requirement.

7.10 Hydraulically Engineered Sprinkler Systems — Ref.: NFPA 13

7.10-1 It is recommended that hydraulically engineered systems have a minimum of a ten (10) percent safety factor calculated into the system.

7.11 Sprinkler System Supervision — Ref.: IFC 903 & NFPA 13

7.11-1 Automatic sprinkler systems having more than twenty (20) sprinklers shall be supervised in an approved manner for water flow and against tampering. Tamper signals shall transmit a distinct alarm or zone.
7.11-2 Tamper security switches shall be installed on all main and auxiliary controlling valves located in a building or outdoors.

> **EXCEPTION:** Control valves located outside a building and in an underground vault or pit need not be electronically supervised provided they are locked in the "open" position in a manner approved by the Fire Code Official. See Section 7.12-4.

7.11-3 See Chapter 8, Section 8.03-4 of these Standards for requirements pertaining to the fire alarm control panel.

7.11-4 When electronic supervision is not required, valves may be supervised by one of the following methods:

a. Locking the valves open with 3/15-inch plated or galvanized chain or 5/16-inch 7x19 stainless or galvanized wire rope. The chain or wire rope shall be threaded through the valve wheels so they may not turn more than one-quarter (1/4). Chain or wire rope shall be locked with a padlock.

b. Sealing valves in the open position with approved weekly recorded inspections when the valves are within locked enclosures.

7.12 Fire Riser Rooms — Ref.: IFC Section 509

7.12.1 Fire riser rooms shall have an access door to the exterior of the building and signage on the door designating Fire Riser Room.

Chapter 8
FIRE DETECTION AND ALARM SYSTEMS

8.01 Standards Established — Ref.: IFC 907

8.01-1 All automatic and manual fire detection and alarm systems shall be designed, installed, tested and maintained as specified in the 2012 International Fire Code with local amendments, the 2012 International Fire Code Standards, NFPA Standard 72, and as specified in the following subsections of these standards.

8.01-2 Automatic fire alarm systems are required in all occupancies protected by an automatic fire sprinkler system and as required for other special uses and conditions in IFC 907.

Exception: R-3 single-family homes.

8.02 Submission of Plans — Ref.: IFC 907

8.02-1 Plans for all fire detection and alarm systems shall be submitted for review as specified in Chapter 1, Section 1.01-4 of these standards and shall include the information specified in this chapter.

8.02-2 A plan review fee shall be charged for reviewing fire alarm systems. The plan review fee shall be paid at the time the plans are submitted for review. The plans shall be stamped by a minimum of Nicet Level III or an Engineer.

8.03 General Requirements — Ref.: IFC 901, NFPA 72

8.03-1 Fire alarm systems shall only be installed by trained and qualified fire alarm installers with a minimum level Nicet II supervising the installation.

8.03-2 All equipment, devices, and wiring shall be listed or approved by Underwriters Laboratories, Underwriters Laboratories Canada, Canadian Standards Association and/or Factory Mutual and shall be approved for the purpose for which they are intended. No person shall perform any type of modification to any device which would void its listing.

8.03-3 All wiring shall be done in compliance with the National Electrical Code, pertaining to Fire Alarm Signaling Circuits, and any other applicable article of that code.

8.03-4 The fire alarm control panel, trouble signal indicators, or remote annunciator shall be installed in areas which are normally staffed during the hours the building is occupied.

8.03-5 The International Fire Code requires that all fire alarm systems and appurtenances thereto shall meet the approval of the Fire District as to installation and location and shall be subject to such periodic tests as required by the Chief. **Plans and specifications shall be submitted to the Fire District for review and approval prior to installation.**

8.04 Required Plan Submittal Information — Ref.: IFC 907

The following minimum information shall be required to be included with all drawings submitted to the Fire District for review.

1. Job site address and company name.
2. Owner and address of protected structure.
3. Name of designer, license number and/or NICET Certification, and telephone number.
4. Name of installing company, contact person, license number and/or NICET Certification, and telephone number.
5. Monitoring company name and telephone number.

6. Type of building construction, square footage and occupancy.
7. The type of fire alarm system to be provided. (Class A, B, addressable, analog, local, proprietary, etc.)
8. Calculations (e.g., secondary supply and voltage drop calculations)
9. A complete list of detection, evacuation signaling, and annunciator zones.
10. List specifications on (or provide specification sheets)
    a) All appliances/devices
    b) Control panels, system components, modules, relays, and remote annunciators
    c) Wiring and battery
    d) All system components shall be listed and found suitable for intended use.
11. Operating instructions for the system (copy of what will be posted at the FACP)
12. Compatibility listings.
13. Manufacturer's inspections instructions – NFPA 72 Chapter 7
14. Applicable Codes and Standards used in the system design.
15. Any other information, which is required to comply with the applicable codes, standards, and other design criteria.
16. Plan review fee per current fee schedule.

Required Drawings:

1. All sheets to be the same size (Recommended 24 x 16)
2. Drawings to be to scale
3. Cut of structure to indicate room height, etc.
4. Ceiling details and configurations
5. Circuit Wiring Diagram
6. Sequence of operation
7. Floor plan of the entire building, including all floors and areas.
8. Show all devices and appliances

(a)	Smoke detectors	(f)	Flow switches
(b)	Heat detectors	(g)	Tamper switches
(c)	Duct detectors	(h)	Horns/Strobes
(d)	Pull stations	(i)	Control panel
(e)	Door closures	(j)	Remote annunciator
(k)	Other extinguishing systems		

9. Show detector spacing and locations
10. Show notification device spacing & locations
11. Wiring legend
12. Symbol list

13. Any other information, which is required to comply with the applicable codes, standards, and other design criteria.

8.05 System Monitoring **Ref.: IFC 907**
NFPA 72

8.05-1 All required fire alarm systems shall be supervised by an approved central, proprietary or remote station service or a local alarm which will give an audible signal at a constantly attended location.

8.05-2 A dedicated phone line shall be required for all systems.

8.06 Fire Alarms for Existing Buildings **Ref.: IFC 1103.5 Amended**

8.06-1 Non-Monitored Sprinkler System A fire alarm system shall be installed when an existing, non-monitored fire sprinkler system is modified by 20 or more heads.

8.06-2 Newly Installed Sprinkler System A fire alarm system is required to be installed when an existing building is retrofitted with a fire sprinkler system per requirements in IFC 1103.5 Amended.

Chapter 9
ABOVEGROUND FUEL TANK INSTALLATIONS

9.01 General **Ref.: IFC Chapter 57**

9.01-1 All aboveground fuel tanks used for storing and dispensing flammable or combustible motor vehicle fuels shall be designed, installed, and tested by the Fire Prevention Division of the Camp Verde Fire District according to the 2012 International Fire Code and as specified in the following subsections of this standard.

9.01-2 The contractor or property owner proposing the installation of aboveground fuel tanks shall check with the appropriate planning and zoning department to determine if the local zoning laws allow aboveground fuel tanks at the proposed site.

NOTE: Underground Fuel Storage and Dispensing: Any plans for underground fuel tanks used for storing and dispensing flammable or combustible motor vehicles fuels shall be submitted to both the Arizona State Fire Marshal's Office and the Fire Prevention Division of the Camp Verde Fire District as the Camp Verde Fire District has jurisdiction over all aboveground piping and devices.

9.02 Submission of Plans

9.02-1 Plans shall be submitted to the Fire Prevention Division for the installation, operation, repair, or modification of aboveground fuel tanks used for storage and dispensing of flammable or combustible liquid motor fuels.

9.02-2 A plan review fee shall be charged for reviewing fuel tank installations and modifications. The plan review fee shall be paid at the time the plans are submitted for review.

9.02-3 Plans shall be submitted for approval prior to installation. The plans shall be drawn to scale and shall include all essential details, including but not limited to:

- Business owner's name, address, and telephone number.
- Job site address.
- Contractor's name, address, and telephone number.
- Types and quantities of liquids to be stored or dispensed.
- Method of storage and dispensing.
- Overfill prevention method.
- Spill containment method.
- Specification sheets for all tanks, equipment, piping, and appliances used in the installation.
- Site plan indicating:
    - Vehicle access
    - Aboveground tank location(s).
    - Vehicle impact protection for tanks & dispensers.
    - Emergency controls location.
    - Distances from tanks and/or dispensers to property lines, buildings, and ignition sources.
    - Secondary containment.
    - Other aboveground or below ground flammable or combustible liquids tanks, LP-gas or CNG storage vessels.
    - Fire suppression appliances or equipment.
    - Electrical system.
    - Above and below grade piping, to include dispensing devices and filling devices.
    - Signage
    - Overfill protection
    - Venting
- Other information as required by the Fire Marshal.

Chapter 10
MISCELLANEOUS STANDARDS

10.01 Standards Established — Ref.: IFC 901

All fixed fire extinguishing systems, other than sprinkler or standpipe systems as specified elsewhere in these standards, shall be designed, installed, tested, and maintained in compliance with the appropriate NFPA standard for that type of system.

10.02 Protection of Fuel Gas Equipment — Ref.: IFC 312

10.02-1 When exposed to probable vehicular damage due to proximity to alleys, driveways, or parking areas, aboveground gas tanks, meters, regulators and piping shall be suitably protected. Acceptable protection shall consist of guard posts installed in the following manner:

1. Guard posts shall be constructed of steel not less than four (4) inches in diameter and shall be concrete filled.

2. Guard posts shall be set not less than three (3) feet deep in a concrete footing of not less than a fifteen (15) inch diameter.

3. Guard posts shall be set with the top of the posts not less than three (3) feet above ground.

4. Guard posts shall be located a minimum of three (3) feet from the hydrant and shall be located no more than four (4) feet apart.

5. Guard posts shall not interfere with the use or operation of the fire hydrant. The number of posts provided shall be sufficient to adequately protect the hydrant.

Other methods that will provide equivalent protection may be submitted for review and approval by the Fire Marshal.

10.02-2 Where fuel gas piping and equipment is protected in a means acceptable to the fuel gas utility company, that method may be considered acceptable to the Fire Code Official.

10.03 Spray Booth Construction — Ref.: IFC Section 2404

10.03-1 Unlisted, site-built spray booths shall be constructed of non-combustible materials in compliance with the International Fire Code. Plans shall be submitted to and approved by the Fire Marshal prior to construction. Electrical and mechanical components of spray booths shall be approved by the appropriate building department prior to construction.

10.03-2 A plan review fee shall be charged for reviewing spray booths. The plan review fee shall be paid at the time the plans are submitted for review.

10.04 Occupant Load Signs — Ref.: IFC 1004

10.04-1 Where a building or place of assembly is required to have its occupant capacity posted for public view, the sign shall consist of letters and numbers at least one (1) inch in height which contrasts to their background.

10.04-2 The occupant capacity sign shall be designed as follows:

MAXIMUM OCCUPANCY
_____ PERSONS

If applicable, a dual use occupant load sign may be installed. It shall be designed as follows:

MAXIMUM OCCUPANCY OR LOAD
_____ PERSONS

SEATING CAPACITY WITH TABLES
_____ PERSONS

10.04-3 The sign shall be permanently located in the building or in each separate room adjacent to the main entrance and shall remain visible at all times.

10.05 No Smoking Signs **Ref.: IFC 310**

10.05-1 When required by the Fire Code Official, permanent "NO SMOKING" signs shall be prominently displayed in all areas where smoking is prohibited.

10.05-2 "NO SMOKING" signs shall consist of letters at least five (5) inches in height that contrast to their background.

10.06 Flammable Liquid Storage Room Drainage **IFC Chapter 50**
IFC Chapter 57

10.06-1 Flammable liquid storage rooms, as defined by the IFC, shall be provided with drainage systems capable of removing an amount of flammable liquids equal to the largest container in the room plus a calculated minimum fire flow of the sprinkler system in the room.

10.06-2 The discharge system shall be designed to prevent the anticipated spill and flow from the sprinklers from overflowing the liquid-tight sills in the storage room.

10.06-3 Drainage systems shall discharge to on-site retention basins designed to accommodate the discharge rate.

10.07 Commercial Kitchen Hood Extinguishing Systems **Ref.: IFC 904**
NFPA 96

10.07-1 General

Commercial kitchen hood extinguishing systems installed within the Fire District shall comply with the UL 300 Standard. Systems not in compliance with this standard shall be prohibited from being installed, modified, expanded, or moved into a building within the Fire District.

A Class K fire extinguisher is required for all new commercial kitchen systems.

Pre-existing, non-compliant kitchen hood extinguishing systems that are serviceable shall be allowed to continue provided that the systems are not modified, expanded, or moved.

On site inspection by Camp Verde Fire District is required for approval of the hood system.

10.07-2 Plan Review Fees **Ref.: IFC 113**

A plan review fee shall be charged for reviewing kitchen hood extinguishing systems. The plan review fee shall be paid at the time the plans are submitted for review.

10.07-3 Submittal Information **Ref.: IFC 901**

The following information shall be included on all working plans submitted for review.

General Information

1. Name of project owner and occupant.
2. Job site address.
3. Full height cross-section.
4. All plans shall bear a clearly marked scale.

Fire Extinguishing System (Chemical)

1. Make, model, and type of fire extinguishing system.
2. Cylinder mounting location.
3. Type, size, and configuration of discharge piping.
4. Location and configuration of all ells, tees, and distributors.
5. Location and configuration of system actuating tubing.
6. Location and configuration of duct, plenum and surface discharge nozzles.
7. Location and number of flow restricting or balancing devices.
8. Location and type of cooking appliances and char-broilers.
9. Clearances of surface nozzles above cooking appliances.
10. Location and temperature rating of fusible links.
11. Manual pull station location.
12. Location, make and model of automatic fuel shut-off device.
13. Location, make, and model of all reset relays.

APPENDIX I

FIRE ACCESS TURNAROUND DETAIL

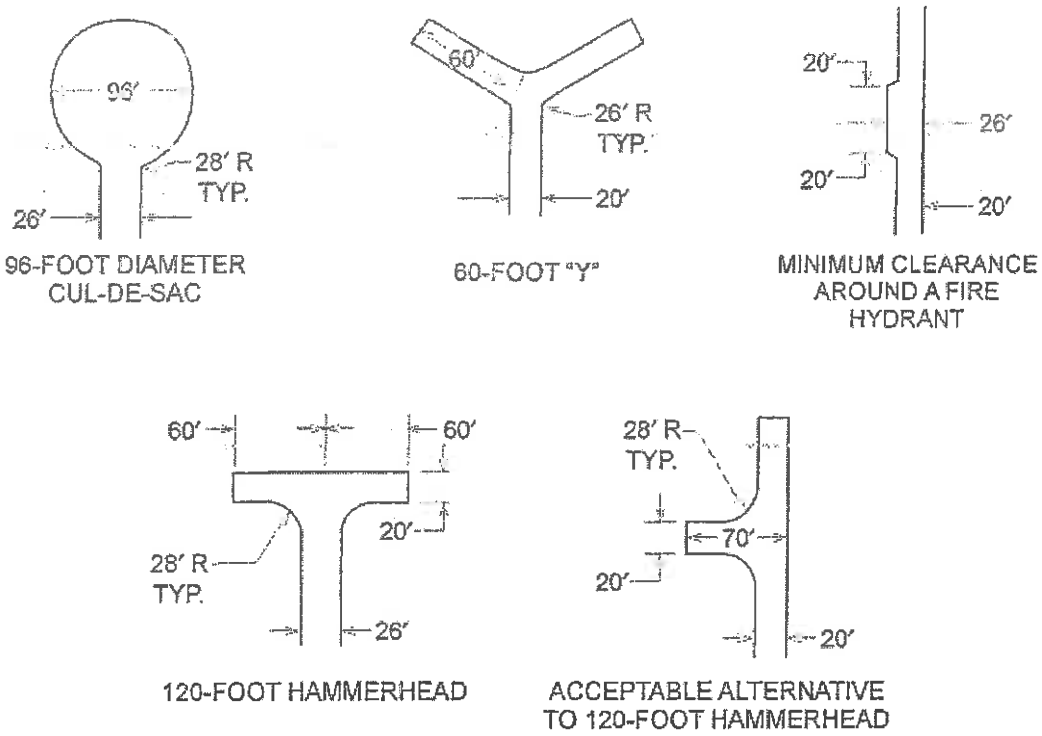

For SI: 1 foot = 304.8 mm.

FIGURE D103.1
DEAD-END FIRE APPARATUS ACCESS ROAD TURNAROUND

APPENDIX II

FIRE LANE CONSTRUCTION GUIDELINES

Option #1
Eight (8) inches of compacted ABC or compacted decomposed granite over a prepared subgrade, with retainer curbs may be used. Subgrade shall be compacted to a 95% density. ABC should be placed and compacted in two (2) lifts of four (4) inches each, to 95% density. Retainer curbs shall be four (4) inches wide by eight (8) inches deep, using 2,500 PSI concrete. Top of curb shall be at finished grade. After installation a compaction test will be required at random locations every 50 feet. A compaction report shall be provided to the fire department prior to final approval.

Note: This option is designed for industrial sites.

Option #2
"Grasscrete," either cast-in-place or precast units a minimum of four (4) inches thick with retainer curbs may be used. "Grasscrete" shall be placed over a prepared subgrade and four (4) inches of compacted ABC (95% density). Standard concrete blocks will not be considered a substitute for "Grasscrete" modules. Retainer curbs shall be four (4) inches wide by eight (8) inches deep, using 2,500 PSI concrete. Top of curb shall be at finished grade.

Option #3
Two (2) inches of asphaltic concrete (C-3/4 mi) over six (6) inches of compacted ABC on a prepared subgrade may be used. ABC and subgrade to be compacted to 95% density. Asphaltic concrete shall have thickened edges per Y.A.G. Detail 201 Type A. Retainer curbs may be used in lieu of the thickened asphaltic edge treatment.

Option #4
Alternative methods may be used with ***prior approval*** of the Fire Chief. Design of the fire lane shall be by a civil engineer, registered in the State of Arizona. All width and weight requirements as noted shall be met along with delineation of fire lane from other areas of the project.

NOTE: The above options are recommended as minimums to assure all-weather access for fire equipment on a limited use basis. Design gross vehicle weight is 75,000 pounds.

NOTE: MINIMUM WIDTH OF THE DRIVEABLE SURFACE IS 20 FEET FOR ALL OPTIONS. PLANS SHALL BE SUBMITTED AND APPROVED *PRIOR* TO INSTALLATION

APPENDIX III

APPROVED LOCKING DEVICES

KEY BOXES

Approved key box: KNOX BOX manufactured by The Knox Company

LOCKING FDC CAPS

Approved Fire Department Connection (FDC) locking caps: Knox FDC caps manufactured by The Knox Company.

LOCKING KEYPADS AND/OR PADLOCKS FOR GATED COMMUNITIES, GATED AREAS, AND MINI-STORAGE FACILITES

Approved key switch for locking keypads: Knox key switch manufactured by The Knox Company.
Approved padlock: Knox padlock manufactured by The Knox Company.

Approved distributor: Knox Company
1601 W. Deer Valley Road
Phoenix, AZ 85027
1-800-552-5669
www.knoxbox.com

APPENDIX IV

GATE KEY SWITCH AND POST DETAIL

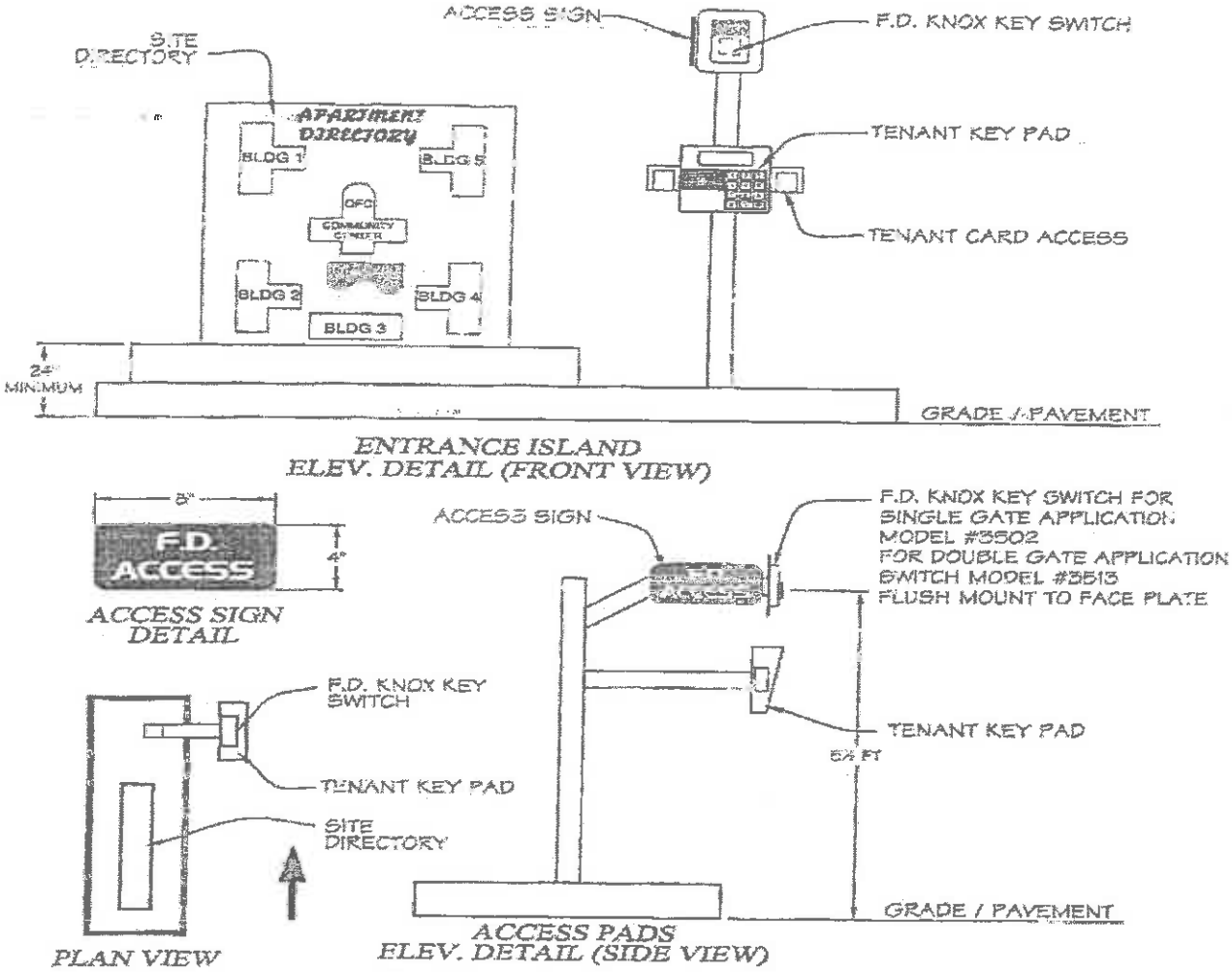

Appendix V

FIRE RISER AND REMOTE FDC DETAIL

Underground Fire Line Plan Review Submittal Requirements

These items shall be included on all underground plans and submitted with $60 plan review fee

1. Project Name
2. Address
3. Contractor Name, Phone Number, Address and License Number
4. Site plan that includes:
   - A. Adjacent streets with names & locations shown
   - B. North direction indicated and drawing scale noted
   - C. Paved Parking, Roads & Fire Lanes are indicated
   - D. Hydrant locations shown with distance
   - E. Water Main location and size shall be shown
   - F. Underground fire main size and type shall be located and shown from municipal supply to interior of building.
   - G. Thrust Blocks are required and shall be shown
   - H. Any Clamps / Rods shall be noted
   - I. Type of bedding material shall be noted
   - J. Fire Department Connection (FDC) shall be noted as:
     - "located on wall on separate plans" or,
     - remote shall be drawn on underground plans showing supply line
   - K. FDC Location shall be approved and accessible

On Site:

1. A rough-in inspection shall be required prior to covering the piping.
2. The piping shall be center loaded, leaving the joints exposed and a 2-hour, 200 pound pressure test shall be witnessed by CRMD personnel.
3. A full orifice flush is required for final approval.
4. These inspections are also required for the FDC if it is remote.

Note: All inspections shall be in conjunction with the appropriate water department as required. Freeze Protection is required.

MIN 1.0' FROM WALL AND 3" CLEARANCE

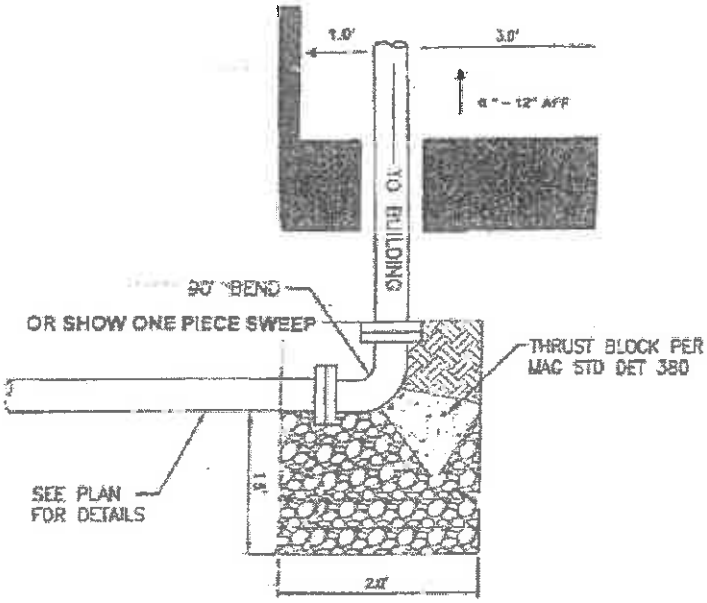

FIRE SPRINKLER SUPPLY LINE SWEEP INTO BUILDING

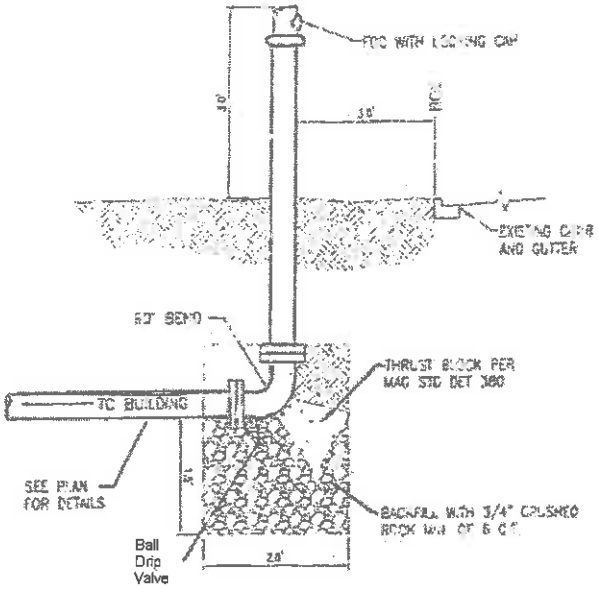

FIRE DEPARTMENT CONNECTION (FDC) DETAIL