To All Event Planners/Coordinators:

As Town staff works to develop a more efficient and effective local government, departments are focusing on streamlining processes, such as the event permitting process. To assist in planning your Special Event, the Clerk's Office has prepared a handbook comprised of helpful information that will assist you in planning and hosting a safe and successful Special Event or festival.

The Special Event Handbook contains information about how and when to file applications for permits and licenses, as well as information about insurance requirements, clean-up, street closure, licenses, sales tax, and much more. It also includes an application form with a checklist of everything that you need to know and do to host an event within the incorporated limits of the Town. The regulations apply to all events or activities that are open to the general public and that are located within the incorporated boundaries of the Town or that is located on Town-owned property, facilities, streets, rights-of-way, and sidewalks. You will also find contact names and numbers to help in planning your event.

We hope that you will find the handbook helpful as you plan and hold your event that contributes so much to the spirit and economy of Camp Verde. Thank you for all that you are doing to make the Town of Camp Verde the best to work, live and play!

Respectfully,

Virginia Jones
Town Clerk

TABLE OF CONTENTS

Section	Subject	Page #
1	Special Event Permit Information	3
2	Fee Schedule	8
3	Time-line for Hosting Special Events	9
4	Casual Business License	10
5	State Transaction Privilege Tax Numbers and Sales Tax	18
6	Street Closures/Barricades	19
7	Site Map	21
8	Banners	23
9	Clean-up Plan	24
10	Insurance Requirements	25
11	Alcohol Beverage Process	27
12	Security	33
13	Health Department Permits	34
14	Fire Safety Requirements	48
15	Tents, Temporary Structures and Vehicles	63

Forms

	Special Event Application	3
	Casual Business License	17
	Traffic/Safety/Barricade	20
	Site Map	22
	Banner Application	23
	Department of Liquor Special Event Application –Sample Only**	29
	Yavapai County Health Department – Sample Only**	35
	Camp Verde Fire District	49

****It is the responsibility of the Event Coordinator to contact:**
Yavapai County Health Department
Arizona Department of Liquor License and Control and
Camp Verde Fire District

TOWN OF CAMP VERDE
Parks & Recreation Department
395 S. Main Street, Camp Verde, AZ 86322
928-567-0535 fax 928-567-1540

SPECIAL EVENT PERMIT APPLICATION

GENERAL INFORMATION

Sponsoring Organization: _____

Responsible Party: _____

Home Phone:_____Work:_____Cell:_____

Mailing Address:_____

_____

Event Name:_____Annual Event: Yes☐ No☐ Years _____

Date(s) of Event:_____ Start Time:_____AM / PM End Time _____AM / PM

Set-up Time:_____ AM / PM Take Down Time:_____ AM / PM

SPONSORS

Is the sponsoring organization a non-profit? ☐ Yes ☐ No

Please provide proof of non-profit status: _____

Benefiting non-profit organization(s):_____

Benefiting in what capacity? (Please be specific)

_____

_____

EVENT DESCRIPTION

Please give a detailed description of event/festival_____

_____

_____

_____

_____

Anticipated Attendance:_____

Proposed Location of Event:_____

(Please list all facilities to be used Including parking lots, facility, streets, Parks, etc.)

Facility _____ Location _____

Facility _____ Location _____

Facility _____ Location _____

GENERAL INFORMATION

(Check all that apply)

Will there be an admission charge? ☐ Yes ☐No Amount:$_____

Will there be amplified entertainment? ☐ Yes ☐No

If yes, describe:

_____

Will you have food vendors? (See page 34 for Health Dept) ☐ Yes ☐No (If yes, see Section 13)

Will you have craft vendors? ☐ Yes ☐No (If yes, see Section 4 & 10)

Will you need Town water connections? ☐ Yes ☐No

If yes, describe: _____

_____

Will you need Town electrical connections? ☐ Yes ☐No

If yes, describe:

_____

Will alcohol be served at this event? (See Page 27) ☐ Yes ☐No (if yes, see Section 11)

If yes, describe:

_____

Will you require street closure? (See page 19) ☐ Yes ☐No (If yes, see Section 6)

If yes, describe:

_____

Have you included all of your paperwork?

☐ Special Event Application (Page 3)

☐ Banner Application (Page 23)

☐ Clean–up Plan (Page 24)

☐ Liquor License Application (Page 27)

☐ Site Map (Page 22)

☐ Street Closure Application (Page 19)

☐ Certificate of Liability (Page 25)

Total Amount Due $_____

Deposits Due $_____

I/We _____, its officers, employees and members shall through the signing of this Agreement by an authorized party or agent, indemnify, hold harmless and defend the Town of Camp Verde and its agents and employees from all suits and actions, including reasonable attorneys' fees and all costs of litigation and judgment of every name and description against the Town of Camp Verde as a result of loss, damage or injury to person or property by reason of any action or omission by the Town of Camp Verde, its agents or employees for the use of Town facilities, fields and recreational facilities.

_____ _____ _____

Applicants Signature Date Approval Signature

Date

COMMENTS AND FEES FROM THE FOLLOWING DEPARTMENTS:
This page for Town use only

☐ Parks & Recreation-Comment:_____Fee_____

☐ Public Works-Streets Division-Comment:_____Fee_____

☐ Maintenance Department-Comment:_____Fee_____

☐ Marshal's Office-Comments:_____Fee_____

☐ Clerk's Office-Comments:_____Fee_____

☐ Finance Department-Comments:_____Fee_____

☐ Planning & Zoning Department-Comments:_____Fee_____

☐ Risk Management Department-_____Fee_____

☐ Camp Verde Fire District-Comments:_____Fee_____

☐ Town Council-Comments:_____Fee_____

Department Remarks: Please forward remarks to the Clerk's Office

_____

_____

_____

_____

Received:

☐ Event Coordinator Insurance Date _____

☐ Vendor Insurance Date _____

☐ Council Approval for Alcohol Date _____

☐ Fees for Security Date _____

☐ Casual Business License & Fees Date _____

☐ Approval for Street Closure Date _____

☐ Event Fees Date _____

☐ Deposits Date _____

☐ List of all Vendors (5 working days after event) Date _____

Who must apply?

Groups/organizations or individuals who plan to host a Special Event, parade, concert, race, or public gathering that will be held within the corporate boundaries of the Town of Camp Verde or an event that will affect public property or rights-of-ways (ROW) must complete the Special Event Permit Application and submit it to the Town of Camp Verde Clerk's Office. All fees must be paid prior to the event date.

What is a special event?

A festival or event that will be held within the corporate boundaries of the Town of Camp Verde that will:

- Be held on or affect Town facilities, property, streets, ROW or sidewalks;
- Require special services beyond those the Town provides its citizens under ordinary, everyday circumstances; and/or
- Have activities that require issuing one or more additional licenses or permits (alcoholic beverages, food sales, parades, and street closure).

Payment of the required fees and deposits must be submitted with your completed application packet.

What is your classification?

Class B – Non-profit, individuals, groups or organizations using facilities whose purpose is clearly of a non-profit nature that benefits the Town in part or whole.

Class C – For-profit individuals, groups or organizations using facilities for the purpose of profit.

What is the process?

Anyone who plans to host a Special Event within the corporate boundaries of the Town of Camp Verde must follow the procedures below. You must complete the application packet and submit all fees, deposits, and certificates before your event will be approved and a special event permit issued. Holding events for the general public without proper permitting is a violation of the Town Code and could result in the immediate closing of your event and/or criminal prosecution.

1) If your event will be held on Town property, reserve the facility by calling Parks & Recreation at 928-567-0535 ext. 134. Note: Inquiries of availability does not guarantee the date is reserved for your group.

2) If the Town facility is available, submit a completed Special Event Permit Application Packet to the Clerk's Office at 473 S. Main Street, Ste. 102. Once the application is received, the date requested will tentatively be reserved for your event. Confirmation of the date will depend on your complete submittal. Application packets are available in the Clerk's Office between the hours of 8 a.m. and 5 p.m. Monday through Friday and on our website at www.cvaz.org.

   All Special Event Permit Applications must be legible, printed or typed and must be submitted at least **90 days prior** to the event.

3) If the Special Event is NOT being held on Town owned property, you must submit your completed Special Event Application and written authorization from the property owner, to the Clerk's Office at 473 S. Main Street, Ste. 102 at least **90 days prior** to the event.

4) A completed Special Event Application Packet will be forwarded to all appropriate departments for review and fee evaluation. The process may take up to 10 working days so that each department and agency has sufficient opportunity to review the issues. Department and agency review may include, but not be limited to, the following:

   - Camp Verde Fire District
   - Camp Verde Marshal's Office
   - Finance Department
   - Mayor and Council
   - Maintenance Department
   - Risk Management Coordinator
   - Parks & Recreation Department
   - Planning & Zoning Department
   - Public Works-Streets Division
   - Town Clerk
   - Town Manager

After the departmental and agency review and comment period, you will be notified that your application has or has not received approval. You will be provided with an itemized statement of the fees that are due prior to the issuance of the Permit.

Please note:

- The use of buildings and/or facilities shall not be granted if it is determined that such use is not in the best interest of the Town.
- The Parks & Recreation Department reserves the right to cancel or suspend any and all events with little or no notification in the event of inclement weather or unsafe conditions. In this case, all permitting fees will be refunded.

SPECIAL EVENT FEES & DEPOSITS

		Class B **Non-Profit Organizations** **(501(c)3 must be provided)**	**Class C** **For Profit Organizations**
Application Fee		Waived	$50.00
Banners for Light Poles		N/A	N/A
Banners		N/A	N/A
Business License-Regular		N/A	$50 Application Fee and $30 per year.
Business License-Casual		N/A	$50.00 per day **
Key Deposit		$50.00 per key	$50.00 per key
Cleaning/Security/Damage Deposit		$500.00	$500.00
Fencing		$5.00 per panel	$10.00 per panel
Liquor License Application Fee		$50.00 per event	$50.00 per event
Security-Off Duty Officers		$50.00 per hour per officer Minimum of two officers	$50.00 per hour per officer Minimum of two officers
Tent Lighting		$20.00	$30.00
Stage		$150.00	$200.00
Ramada/Vendor Electric		$100.00	$150.00
Use of Water		$20.00	$40.00
Kitchen *(1 or 2 day event)*		$75.00 per day	$100.00 per day
Gym *(1 or 2 day event)*		$200.00 per day	$400.00 per day
Gym Floor Preparation		$50.00	$75.00
Room 206 & 207		$75.00 per day	$100.00 per day
Traffic & Safety-Street Closure			
Room 204		$50.00 per day	$75.00 per day
Site Plan - Parking			
Temp. Use Permit-If applicable-Zoning Clearance		$75.00 per event	$75.00 per event
PA Systems, extension cords, water hoses, cash registers, tables & chairs are not available			
* The Casual Business License Fee may be waived with Manager approval for those vendors participating in tourist-focused events such as the Cornfest, Spring Heritage, and Fort Verde Days,			

Local Rental Resources:

Verde Valley Rental Cottonwood, AZ 928-634-8531	Red Rock Rental Sedona, AZ 928-282-5313	Arizona Tents & Events Phoenix, AZ 602-252-8368

TIMELINE FOR PLANNING YOUR SPECIAL EVENT

90 Days Prior to Hosting a Special Event

☐ Check availability of facility being requested.

☐ Request reservation for tentative date for your event.

☐ Submit completed Special Event application. You will be notified by the Clerk's Office when the application review has been completed.

☐ Request Street Closure Permit

60 Days Prior to Hosting a Special Event

☐ Submit Liquor License Application to Town Clerk's Office. This application must be placed on the Council Agenda for recommendation.

45 Days Prior to Hosting a Special Event

☐ Submit Health Department Event Coordinator Form to Yavapai County. This form is included in the packet; however it is your responsibility to contact Yavapai County.

30 Days Prior to Hosting a Special Event

☐ Submit Certificate of Insurance to the Clerk's Office.

☐ Submit Casual Business License and fees to the Clerk's Office. (Page 17)

☐ Submit Certificates of Insurance and Casual Business License forms from all participating vendors.

☐ Submit payment for off-duty officers to the Clerk's Office. If required you must also submit press release for any street closures and notify business that may be affected.

5 Working Days after the Special Event

☐ Submit list to Clerk's Office of all Vendors.

☐ Submit list to the Arizona Department of Revenue of all Vendors

CASUAL BUSINESS LICENSE

The event coordinator and all vendors are required to have a business license or a casual business license. (see Town Code, Chapter 9 included in your packet)

It is the vendor's responsibility to submit an application and associated fees to the Clerk's Office. The fee for the Casual Business License is $50.00 per day unless waived. The certificate must be displayed during the entire event.

Just prior to the opening of your event, Town staff (Town Code-Section 9-1-9 enforcement by Police Officer) will make an onsite inspection. Any vendor who does not have a business license on display in a conspicuous place (Town Code, Sec. 9-1-6) will not be allowed to open their booth.

Virginia Jones, CMC
Town Clerk
473 S. Main Street, Ste. 102
Camp Verde, AZ 86322
Phone 928-554-0023
Fax 928-567-9061
virginia.jones@campverde.az.gov

TOWN CODE
CHAPTER 9
BUSINESS REGULATIONS
Article 9-1
CASUAL BUSINESS LICENSE

9-1-1 Definitions
9-1-2 License Required
9-1-3 Applications
9-1-4 Fees
9-1-5 Fees for Charitable, Religious or Civic Organizations
9-1-6 License to be posted
9-1-7 Location Restrictions
9-1-8 Undue Noise Prohibited
9-1-9 Enforcement by Police Officers
9-1-10 Revocation
9-1-11 Signs to be Observed

Section 9-1-1 Definitions

In this article unless the context otherwise requires:
A. "Canvasser or solicitor" means any person, whether a resident of the Town or not, traveling either by foot, wagon, automobile, motor truck, or any other type of conveyance from place to place, from house to house or from street to street taking or attempting to take orders for sale of goods, wares and merchandise, personal property of any nature whatsoever for future delivery or for services to be furnished or performed in the future, whether such person is collecting advance payments on such sales or not, provided that such definition shall include any person who, for himself or for another person, hires, leases, uses or occupies any building, structure, tent, railroad car, boat, hotel room, lodging house, apartment, shop, or any other place within the Town for the sole purpose of exhibiting samples and taking orders for future delivery.

B. "Peddler" means any person, whether a resident of the Town or not, traveling by foot, wagon, automobile, or any other type of conveyance from place to place, from house to house or from street to street carrying, conveying or transporting goods, wares, merchandise, meats, fish, vegetables, fruits, garden truck farm products or provisions, offering and exposing the same for sale or making sales and delivering articles to purchasers, or a person who, without traveling from place to place, shall sell or offer the same for sale from a wagon, automotive vehicle, railroad car or other vehicle or conveyance. It is further provided that a person who solicits orders and, as a separate transaction, makes delivery to purchasers as a part of the scheme or design to evade the provisions of this chapter shall be deemed a peddler subject to the provisions herein contained. The word "peddler" shall include the words "hawker" and "huckster".

C. "Transient merchant," "itinerant merchant," or "itinerant vendor" means any person, whether owner or otherwise, whether a resident of the Town or not, who engages in a temporary business of selling and delivering goods, wares and merchandise within the Town, and who, in furtherance of such purpose, hires, leases, uses or occupies any building, structure, motor vehicle, tent, railroad car, boat, hotel room, lodging house, apartment, shop, or any street, alley or other place within the Town for the exhibition

and sale of such goods, wares and merchandise, either privately or at public auction, provided that such definition shall not be construed to include any person, firm or corporation who, while occupying such temporary location, does not sell from stock but exhibits samples only for the purpose of securing orders for future delivery. The person so engaged shall not be relieved from complying with the provisions of this chapter merely by reason of associating temporarily with any local dealer, trader, merchant, or auctioneer or by conducting such transient business in connection with, as a part of or in the name of any such local dealer, trader, merchant, or auctioneer.

D. "Special Event" includes the temporary sales and displays by street vendors, craft shows, fair booths, and similar operations usually associated with a special event or holiday.

Section 9-1-2 License Required

It is unlawful for any peddler, solicitor, canvasser, transient merchant, itinerant merchant, or itinerant vendor to engage in such business within the corporate limits of the Town without first obtaining a Casual Business license in compliance with the provisions of this chapter. This article shall also govern all special event sales and operations within the Town limits. This article does not apply to participants of Town Events who have paid booth fees, garage sales, auctions, sidewalk sales, student fund raising sales, and bake sales that occur less than three (3) times per year; events occurring more than three (3) times per year must obtain a Casual Business License. This article also does not apply to licensed retail businesses that conduct occasional off-site sales events, such as car and recreational vehicle shows and home shows. However, off-site sales may require zoning clearance.

Section 9-1-3 Applications

A. Applicants for a Casual Business License under this chapter must file with the clerk a sworn application in writing, on a form to be furnished by the Clerk, which shall give the following information:

1. Name and description of the applicant.
2. Address, legal and local.
3. A brief description of the nature of the business and the goods to be sold and, in the case of products of farm or orchard, whether produced or grown by the applicant.
4. Verification of a Transaction Privilege Tax License.
5. If employed, the name and address of the employer, together with credentials establishing the exact relationship.
6. The length of time for which the right to do business is desired. No Casual Business License shall be issued for a period longer than three (3) consecutive days.
7. If a vehicle is to be used, a description of the same, together with license number of any vehicles to be used in or near the display area or other area of business, and other means of identification.
8. A statement as to whether or not the applicant has ever been convicted of any crime, misdemeanor, or violation of any municipal laws and the nature of the offense and the punishment or penalty assessed therefore.
9. Obtain the written permission of the property owner and tenant, if any, for the operation.
10. Obtain any necessary health or other regulatory permits required by law.

B. No license issued hereunder shall be transferable.

Section 9-1-4 Fees
A. The license fees for peddlers, solicitors, canvassers, and transient merchants and the application fee provided in Section 9-1-3 shall be determined by resolution of the Council.

B. No fee shall be required of any resident of the Town of Camp Verde selling products of the farm or orchard actually produced by the resident.

Section 9-1-5 Fees for Charitable, Religious or Civic Organizations
There shall be no fees for charitable, religious, or civic organizations. It shall be the duty of the Clerk to determine if the organization making the application is a charitable, religious, or civic organization and that the individual making the application is a member of the organization. The determination by the Clerk may be appealed to the Town Manager, which may at his discretion decide such appeal or refer it to the Council.

Section 9-1-6 License to be Posted
The license issued by the Clerk shall be posted in a conspicuous place if the licensee is using a vehicle or a building in his business and otherwise must be kept by the person and exhibited at any time upon request.

Section 9-1-7 Location Restrictions
No peddler, canvasser, or transient merchant shall locate on the public street or property, and must have written permission of a property owner for private property. It is unlawful for any peddler, canvasser, or transient merchant to operate in any stationary location, to operate within three hundred feet of a public school ground, or to operate in any congested area where such operation might impede or inconvenience the public or cause traffic or parking hazards. The judgment of a law enforcement officer exercised in good faith shall be deemed conclusive as to whether the area is congested or the public impeded or inconvenienced.

Section 9-1-8 Undue Noise Prohibited
No licensee, nor any person on the licensee's behalf, shall shout, make any outcry, blow a horn, ring a bell or use any sound device, including any loud speaking radio or sound amplifying system, for the purpose of attracting attention to any goods, wares, or merchandise which such licensee proposes to sell upon any of the streets, alleys, parks or other public places of the Town or upon any private premises in the Town where sound of sufficient volume is emitted or produced that is capable of being plainly heard upon the public thoroughfares.

Section 9-1-9 Law Enforcement
It shall be the duty of any law enforcement officer of the Town to enforce the provisions of this article.
Section 9-1-10 Revocation
The Clerk, after notice, for any of the following causes may revoke permits and licenses issued under the provisions of this chapter:

A. Fraud, misrepresentation, or false statement contained in the application for license;
B. Fraud, misrepresentation, or false statement made in the course of carrying on business;

C. Any violation of this article;
D. Conducting business in an unlawful manner or in such a manner as to constitute a breach of the peace or to constitute a menace to the health, safety or general welfare of the public.

Section 9-1-11 Signs to be Observed
It is unlawful for any peddler, solicitor, canvasser or transient merchant, in the course of his business to ring the doorbell or knock at any building whereon a sign bearing the words "No Peddlers," "No Solicitors," "No Canvassers," No Transient Merchants," or a similar message is exposed to public view.

Article 9-2
BUSINESS LICENSES

9-2 Definitions
9-2-1 Purpose
9-2-2 Registration and License
9-2-3 Issuance of Business License
9-2-4 Payment
9-2-5 Posting of Business License
9-2-6 License not Transferable
9-2-7 Fees
9-2-8 Penalty

Section 9-2 Definitions

A. "Business" means occupation, work, or trade in which a person is engaged; commercial, industrial, or professional dealings; the buying and selling of commodities; and any commercial store or factory. For the purposes of this article, "Business" also includes those property owners that offer for lease three (3) or more residential units and/or one (1) or more commercial unit(s) that are located within the incorporated limits of the Town of Camp Verde.

B. "Business Location" means the physical location (address) of the business location. If business location includes more than one parcel, all parcel numbers must be listed on the Application for Business License and receive a Zoning Clearance approval before a Business License will be issued.

C. "Home Occupation" means an occupation, profession, activity or use located in a residential district, and which uses is merely incidental to the residential use and does not change the character of the neighborhood by externally detectable lighting, noise, odor, or appearance associated with the activity, and is created and operated as a sole proprietorship with no more than one non-residential employee. No storage or use of toxic materials and/or chemicals that are utilized in connection with a Home Occupation are permitted in a residential district.

D. "Property Owner" means the legal owner of the land/parcel on which the business is conducted.

E. “Occupier of Land” means a Business Owner that does not own the land/parcel on which the business is conducted.

F. “Telecommuting” means working from home as an employee or employer by way of electronic transmission devices. Telecommuting does not require a Business License.

G. “Toxic Materials/Chemicals” mean liquid, aerosol, or solid substances that are harmful, destructive, deadly, or poisonous to human, animal, or fowl.

Section 9-2-1 Purpose
The Council has determined that it is in the best interest of the public to maintain a list of business activities within the Town to provide contacts for emergency services, directories, compliance with zoning codes, building and fire codes, tax, and/or other ordinances and statutes.

Section 9-2-2 Registration and License Required
It is unlawful for any person, firm, organization, corporation or other entity to engage in business within the corporate limits of the Town without first obtaining a Business License in compliance with the provisions of this chapter. ~~2~~

Section 9-2-3 Issuance of Business License
It is the duty of the Town Clerk to prepare and issue a Business License under this article for every person, firm, company, or corporation liable therefore; the period of time covered; the name of the person, firm or corporation for whom issued; the type of business; the location or place of business and verification of privilege tax license.

Section 9-2-3.1 Certificate of Compliance
No operation of any new business, excluding Home Occupation businesses, will be allowed or Business License issued within the limits of the Town without the issuance of a Certificate of Compliance from the Building Department. The Certificate of Compliance requires a physical inspection of the building to verify that the proposed business activity and building are in compliance with all zoning, building, and fire codes.

Issuance of the Business License does not imply that the Town in any way regulates or warrants the manner in which the operator does business.

Section 9-2-4 Payment
A. All Business License fees shall be paid at the office of the Town Clerk in such manner as may be specified by the Clerk.

B. Business Licenses are issued for a 12-month period. Annual renewal payments are due on the first day of the month in which the license was first issued. For example, renewal fees for License #000 issued on January 30, 2008 becomes due on January 1, 2009.

C. The Business License and registration for all businesses which do not pay the required fees within thirty days of their due date will be cancelled. A new application and associated fees will be required to reinstate the Business License.

D. A full fee shall be paid for each fee period or portion of a fee period in which a business is carried on.

E. A separate Business License must be obtained for each branch established or separate place of business in which any business is carried on. If a business location includes more than one parcel, all parcel numbers must be listed on the Application for Business License. All parcels must receive Zoning Clearance approval before a Business License will be issued.

Section 9-2-5 Posting of Business License
Every person, firm, company, or corporation, having a Business License under the provisions of this article, shall keep such Business License posted and exhibited, while in force, in some conspicuous part of the place of business. Every person having such Business License and not having a fixed place of business shall carry such Business License with him at all times while carrying on that business for which the same was granted. Every person, firm, company, or corporation having a Business License under the provisions of this article shall produce and exhibit the same whenever requested to do so by any officer authorized to issue, inspect, or collect by the Town.

Section 9-2-6 License not Transferable
No Business License issued under the provisions of this article shall in any manner be assignable or transferable to any other person, firm, company, or corporation.

Section 9-2-7 Fees
All businesses liable shall pay a set fee as set forth by the Council by resolution. Fees are non-refundable and are not set on a pro rata basis.

Section 9-2-8 Penalty
It is unlawful for any person to commence, transact, or carry on any business within the Town without first having obtained a license from the Town, or to comply with all provisions of this Chapter. Violations shall be punishable under Chapter 1, Article 1-8 with each day that such business is practiced, transacted or carried on constituting a separate offense. It shall be the duty of any authorized personnel or officer of the Town to enforce the provisions of this chapter.

☐New Business License – Fee - $50.00 – License #_____

☐Special Event Vendor Application – Fee - $25.00 – License #_____

☐Event Name: Select Event

Town of Camp Verde
473 S Main Street, Suite 102
Camp Verde, AZ 86322
Clerk's Office 928-554 0024
www.campverde.az.gov

BUSINESS LICENSE/SPECIAL EVENT LICENSE AND/OR
HOME OCCUPATION APPLICATION
INCOMPLETE APPLICATIONS WILL NOT BE PROCESSED

BUSINESS/VENDOR INFORMATION				TYPE OF OWNERSHIP	TYPE OF SERVICE
Company name				☐ Sole proprietorship	☐ Retail
Phone Number				☐ Partnership	☐ Service
E-mail address:				☐ Corporation	☐ Food
Would you like your renewal notice e-mailed to you ☐ yes ☐no				☐ Other	☐ Non Profit/Civic Organization (No Fee)
Mailing Address City, State ZIP Code					
Location of Business City, State ZIP Code					
Description of Business/Promotional Item/Hours of Operation					
Emergency Contact Name				Emergency Contact Phone #	
State Tax #					
Contractor License #		Square footage of Building:			
Number of Signs		Number of Parking Spaces			
# of Employees		Driver's License Number			
Is this Rental Property ☐yes ☐ no	If Yes Who is Owner of Property where Business is located:				

Issuance of a business license does not constitute a waiver of any existing Zoning Ordinance, other laws, or any deed restrictions (PER TOWN CODE, CHAPTER 9 ARTICLE 9-3-2). BEFORE A LICENSE IS ISSUED, IT WILL BE REVIEWED BY COMMUNITY DEVELOPMENT DEPARTMENT.

All Vendors shall obtain any necessary health or regulatory permits required by law and obtain the written permission of the property owner for the operation prior to setting up a display.

I hereby certify that the statements made herein have been examined by me and are to the best of my belief and knowledge, true and complete. I further certify that I understand that a "Use Permit' or a "Change of Use Permit" may be required prior to the issuance of a Business License.

COMPLETE THIS SECTION ONLY IF YOU HAVE A HOME OCCUPATION BUSINESS

I hereby declare that, in the conduct of my home occupation at the above address, I will comply with the requirements pertaining to such occupations as set forth in the Town of Camp Verde Planning & Zoning Ordinance Part 3 Section 303 "Home Occupations". A home occupation shall be deemed an accessory use to a residential dwelling and shall be subject to the following standards:

Please mark (X) each statement that applies to your home occupation business:

☐The occupation is clearly incidental and secondary to the principal use of the residence; ☐ Not more than one outside employee (not residing on the premises).

☐The occupation is not disruptive of the residential character of the neighborhood; ☐The occupation shall not create a traffic or parking problem;

☐The occupation shall not create any disturbing or offensive activity, noise, vibration, smoke, dust, odor, heat, glare, or other unhealthy or unsightly condition;

☐Signage shall be limited to identification as specified in the Planning & Zoning Ordinance Section 404 F, identification signs.

☐Floor area for the Home Occupation is limited to 25% of the total floor areas of the structure(s) on the premises in which the home occupation is conducted.

By signing below I declare that I have read, understand and agree to abide by the standards set forth in Part 3 Section 303 "Home Occupations" as stated above:

I hereby certify that the statements made herein have been examined by me and are to the best of my belief and knowledge, true and complete. I further certify that I understand that a "Use Permit" or a "Change of Use Permit" may be required prior to the issuance of a Business License. TIME FRAME as required by ARS 9-835 - All Applications will be processed within 10 Business Days unless additional inspections are required by the Building Official. If a Use permit or Change of Use Permit is required, the application will be processed within 10 Business Days after Use Permit is approved and fees paid. A License WILL NOT be issued without the Building Officials Approval.

SIGNATURES FOR BUSINESS LICENSE/SPECIAL EVENT AND HOME OCCUPATION

Signature		Signature	
Title and Date		Title and Date	

***Note: Business license numbers must be included on all correspondence, invoices and Certificates of Insurance's.**

TIME FRAME as required by ARS 9-835 - All Applications will be processed within 10 Business Days unless additional inspections are required by the Building Official. If a Use permit or Change of Use Permit is required, the application will be processed within 10 Business Days after Use Permit is approved and fees paid. A License WILL NOT be issued without the Building Officials Approval.

FOR OFFICE USE ONLY

Date sent to Community Development_____ **Planning & Zoning Review:**_____

Parcel #_____ **Building Review:**_____

Zoning_____ **Code Enforcement Review:**_____

Marshal's Office Notified:_____

Town Clerk:_____

Date

Business License Fees:

New or Change in Ownership or Location	
New Business License Fee/Inspection/Setup Fee	$50.00
Peddler/Solicitor's License (in addition to $1,000 Bond & Cost of Background Check)	$25.00 Per day
Special Event Promoter (Per Event)	No Charge
Special Event Vendor (Non-Profits)	No Charge
Special Event Vendor	$25.00 Per Event
Renewal	
Business License Fee (annual)	$25.00
Name Change in Addition to Annual Fee	No Charge
Liquor License Permits	
Application/Posting/Inspection Fee	$250.00
Business License (annually) + the following:	
Series 01 through 14 and Series 16 & 17	$50.00
Series 15 Special Event (Temporary License - Annually)	$100.00
One-time Special Event Permit	$50.00

STATE TPT NUMBER AND SALES TAX

The event coordinator and all exhibitors at your event are expected to collect and pay applicable sales tax.

It is the responsibility of the event coordinator to provide a list of vendors to the Clerk's Office and the Arizona Department of Revenue. The list should include each vendor's name, business name, mailing address and phone number. A copy of the Vendor list must be submitted to the Clerk's Office within 5 working days after the event.

Contact Information

Arizona Department of Revenue
Peggy Creamer
License Compliance Officer
Phone 480-545-3534
Fax 480-545-3596
pcreamaar@azdor.gov

Town of Camp Verde Clerks Office
Debbie Barber, Town Clerk
473 S. Main Street
Camp Verde, AZ 86322
Phone 928-567-6631 ext. 107
Fax 928-567-9061
dbarber@xcaz.org

STREET CLOSURE/BARRICADE

If an event requires closure of streets or a public ROW, proper barricades and signage are required. An event coordinator who plans to host an event that will involve closing a town right-of-way (ROW) must submit an application with a detailed site map showing where barricades and signs will be placed at least ninety (90) days before an event. Street closings and barricades or signage will be reviewed and authorized on a case-by-case basis by the following departments: Parks & Recreation, Public Works-Streets Division, and the Marshal's Office.

To ensure event producers are in compliance with the Manual of Uniform Traffic Control Devices, the Town of Camp Verde will be responsible for placement and removal of all barricades and signage before and after an event. Event producers will be invoiced for all staff time and costs incurred to rent, insure, and transport barricades to and from the event site. If it is determined by the Street Division and the Camp Verde Marshal Office that additional staffing is required for traffic control work, the cost of Town staffing will be invoiced as added charge to the barricade fee.

Should the event producer elect to provide their own barricades, a licensed barricade company must be used. The company must submit a traffic control plan that includes compliance with the Manual of Uniform Traffic Control Devices and evidence of insurance to the Public Works, Street Division for review and approval.

The Town of Camp Verde may request that an event coordinator notify affected businesses and/or residents if an upcoming event will require street closing(s) and/or send a Street Closing press release and camera ready site map to all media at least two weeks prior to an event.

You will also be required to notify the Fire Department if an upcoming event will require street closure.

Forms that will be needed:
Certificate of Insurance (see section 10)

Public Works-Street Division Traffic and Safety Permit and applicable fees

Important Phone Numbers:

Public Works Department Ron Long, Public Works Director Deborah Ranney, Admin. Asst. 395 S. Main Street 928-567-0534 ext. 137	Camp Verde Fire Department Barbara Rice 928-567-9401	Camp Verde Marshal's Office Lt. Earl Huff 928-567-6621 ext. 407

TOWN OF CAMP VERDE

PUBLIC WORKS-STREET DIVISION

TRAFFIC & SAFETY

Date of Event:_____

Requested by:_____

Contact Phone Number:_____

Event Location:_____

Requested Assistant:_____

(Road Closure, Barricade Transport & Rent:

_____

_____

_____

_____

Name of Barricade Company responsible for placing and removing all barricades:_____

_____

_____ _____

Company Name Contact Person

_____

Address

_____

_____

Phone #_____

SITE MAP

The event coordinator must attach a Site Map of the event to the Special Event Application.

A Site Map should define the event area and include the following information if applicable:

- Location of all tents and temporary structures that will be erected (inflatable, small carnival games, beer garden, etc.)
- Location of utility services
- Location of all vendors
- Location of all dumpsters and trash receptacles
- Location and layout of tables, chairs, picnic tables, etc., that will be used
- Location of any stages that will be used or placed
- Entrances and exits

SPECIAL EVENT LICENSED PREMISES DIAGRAM
(This diagram must be completed with the application)

(Show dimensions, serving area, and label type of enclosures and security positions)
Note: Show nearest cross streets, highway, or road if location does not have an address.

SITE MAP

NORTH

TOWN OF CAMP VERDE
BANNER POLE POLICIES, PROCEDURES AND USE APPLICATION

If you need to hang advertising banners for your event, you must submit the completed Banner Pole application along with your Special Event application. Banners shall not be permitted for religious or political activities.

Banner Size/Location Information:

Finnie Flat & Main Street 2'x8'	**Highway 260 & Oasis Road 4'x12'**

1. APPLICATION-PRIORITIES

a) The **primary use** of the municipal banner poles is for the promotion of recreational activities and special events that are organized and conducted by the Town of Camp Verde.

b) **Town activities, Town-sponsored groups, and Town agencies** will have priority use of the banner poles. If a conflict occurs, use permits held by non-sponsored groups may be cancelled as authorized by the Parks & Recreation Director.

c) Banners for **local activities**, Town co-sponsored events, school activities, Chamber of Commerce, non-profit, individuals, groups or an organization whose purpose is clearly of a non-profit nature and benefits the Town in part or whole will be allowed.

2. POLICIES, APPROVAL, AND REVOCATION PROCESS

a) The Parks & Recreation Director will review and approve all applications for use.

b) Applications shall be issued only to responsible adults 21 years and older.

c) The application should be completed at least 30 days before the proposed date of use.

d) Banners shall not be permitted for religious, political, business, or commercial activities.

e) Banners may not be hung more than two weeks before the event and must be taken down within two working days following the event.

f) Banners left more than two days will be taken down by Town staff and discarded and you will be charged for staff time.

g) All permits shall be immediately revoked by the Parks & Recreation Director upon his/her determination that a violation of any rules, this code, or other Town Ordinances or State Statue has occurred.

Additional Stipulations:_____

Requested dates of use:_____

I HAVE READ THE ABOVE POLICIES AND PROCEDURES AND AGREE TO ABIDE BY SAID RULES.

_____ _____
Applicants Signature Date

_____ _____
Parks & Recreation Director Signature Date

☐ **APPROVED** ☐ **NOT APPROVED**

CLEAN-UP PLAN

You must submit a clean-up plan with your Special Event application. The clean-up plan must include the following information:

- A site map of the festival or event area showing the types and locations of dumpsters, individual trash receptacles, and recycle containers. The Town of Camp Verde also requires the use of recycle containers at all events.

- The names and contact information of individual and/or groups responsible for cleaning up during and after the event.

If an event coordinator fails to clean-up a venue adequately or causes damage to Town of Camp Verde property or facilities, your $500 deposit will be forfeited and your insurance company contacted. The Town will bill the event coordinator for any costs to clean or repair damaged property over the $500 deposit.

Event coordinators are responsible for prompt clean up of Town property, restrooms, parking lots, streets, right-of-ways and sidewalks. Event coordinators are responsible for clean-up from the time when the set-up begins until tear down crews have finished and vacated the premises.

Event coordinator is responsible for clean-up of restrooms and for supplying and restocking the paper products.

Town of Camp Verde dumpsters are not available for use. Event coordinators will need to provide their own adequate roll-off dumpsters. In the event that Town dumpsters are used, disposal fees will be deducted from your deposit.

Contact Information:

North American Waste **928-567-0250**	**Waste Management** **1-800-762-9708**	**Taylor Waste** **928-649-2662**
Arid Waste **928-567-0213**	**SWS** **928-634-6275**	**Taylor & Sons Hauling** **928-649-8335**

INSURANCE REQUIREMENTS

The Promoter of the event must provide a certificate of insurance for General Liability insurance of at least $1,000,000.00 per occurrence and $2,000,000 aggregate against claims for bodily injury, death and property damage and names the **Town of Camp Verde, AZ as an Additional Insured.**

If liquor is sold at the event, an additional $1,000,000 liquor liability policy is required naming the Town of Camp Verde as Additional Insured.

In addition, all food and craft vendors participating in your event must provide a certificate of insurance for General Liability insurance of at least $1,000,000.00 per occurrence and $1,000,000 aggregate against claims for bodily injury, death and property damage and names the **Town of Camp Verde, AZ as an Additional Insured.**

Certificates of Insurance must be turned into the Clerk's Office at least 30 days prior to the opening date of your event. **Certificates of Insurance must specifically name the Town of Camp Verde, 473 S. Main Street, Camp Verde, AZ 86322**, **as additional insured and must also include the name and date of your event. Certificates without this information will not be accepted.**

(Insurance is available through the Tenant User Liability Insurance Program (TULIP).

See the following page

Town of Camp Verde
Presents the
Tenant User Liability Insurance Program
How-To Guide

Your local government has enrolled in a program which allows you, the "user" of a municipal facility, school, or other local government property, to secure cost effective liability insurance that provides protection for you as well as the governmental entity. The Tenant User Liability Insurance Program (TULIP) is a General Liability Policy written in the name of the tenants and/or users of the local government facility or venue.

The Town of Camp Verde is a registered user of the TULIP program through your pool, the National League of Cities (NLC), and HUB International New England via Entertainment Brokers International. Their assigned unique Entity ID-Code is: 0501-273.

How it works:

1) Log on to www.ebi-ins.com/tulip
2) Enter the Entity ID-Code listed above or use the entity drop down menu
3) Select the Type of "event" or "activity" from the drop down window, e.g. wedding or festival.
4) Answer the questions that follow such as:
   - Have you held this event before? ☐Yes ☐No
   - If yes, were there any losses or claims? ☐Yes ☐No
   - Will there be armed private security at this event or activity? Off duty police not included) ☐Yes ☐No
5) Select the Event date or dates on the calendar by clicking on the day of event (if multiple regularly scheduled dates, select all of these).
6) At this point you are able to receive a quick quote by clicking on:

Get your premium now with Quick Quote

7) If you would now like to proceed and purchase the coverage, please complete the requested *Contact & Credit Card Information*, and coverage is automatically bound.
8) A Certificate of Insurance is issued and sent via email, in your Name or Organization's Name, with a Certificate automatically sent via email to your local government.

If you experience technical difficulties or have questions about the eligibility or classification of your event, please contact *Entertainment Brokers International* at 1-800-507-8414 (8:30 AM-5:00 PM PST)

ALCOHOL BEVERAGE PROCESS

If you plan to sell alcoholic beverages at your event you must submit a “Special Event Liquor License” from the Arizona Department of Liquor & Control for Town Council approval. You can obtain the License application at www.azliquor.gov or call 602-542-5141.

Sixty (60) days prior to your event, submit the completed Special Event Liquor License Application to the Clerk’s office at 473 S. Main Street, Camp Verde, AZ 86322. You must also submit a copy of your application to the Camp Verde Fire Department located at 26 W. Salt Mine Rd., Camp Verde. The Clerk will not schedule Council approval without first receiving clearance from the Camp Verde Fire Department. You will be notified of the date that your liquor license request is placed on the Council agenda. You will be charged a Liquor License handling fee at the time your application is submitted for Council Approval.

It is important that you are present at the Council meeting. Town Council meetings are held the first and third Wednesdays of each month. If your liquor license is approved by Council, you will be required to provide liquor liability insurance (Section 11) and you will also be required to hire security through the Marshal’s Office. (Section 13)

SERIES: 15 SPECIAL EVENT LICENSE (Temporary)

Non-transferable

On-sale retail privileges

PURPOSE:

Allows a charitable, civic, fraternal, political or religious organization to sell and serve spirituous liquor for consumption only on the premises where the spirituous liquor is sold, and only for the period authorized on the license. This is a temporary license.

ADDITIONAL RIGHTS AND RESPONSIBILITIES:

The applicant for a special event license must request a special event application from the Department and file the application with the governing body of the city or town, or Board of Supervisors of an unincorporated area of a county (where the special event is to take place) for approval or disapproval. Some local governing bodies may require approximately 60 days prior notice.

If the application is approved by the local authority, and the event meets the requirements for granting the license, the Director will issue a special event license to the qualifying organization.

Qualifying organizations will be granted a special event license for no more than ten (10) days in a calendar year. Events must be held on consecutive days and at the same location or additional licenses will be required. The license is automatically terminated upon closing of the last day of the event or the expiration of the license, whichever occurs first.

The qualified organization must receive at least twenty-five percent (25 %) of the gross revenues of the special event liquor sales.

A person selling spirituous liquor under a special event license must purchase the spirituous liquor from the holder of a license authorized to sell off-sale; *except that,* in the case of a non-profit organization which has obtained a special event license for the purpose of charitable fund raising activities, a person may receive the spirituous liquor from a wholesaler as a donation.

AVERAGE APPROVAL TIME: One (1) to seven (7) days.

PERIOD OF ISSUANCE:

Issued for no more than a cumulative total of ten (10) days in a calendar year. A special event may be held for more than one (1) day, but it must be held on consecutive days and at the same location or additional licenses will be required.

FEES: $25.00 per day.

ARIZONA STATUTES AND REGULATIONS:

ARS 4-203.02, 4-244, 4-261; Rule R19-1-228, R19-1-235, R19-1-309.

SAMPLE
COPY

ARIZONA DEPARTMENT OF LIQUOR LICENSES & CONTROL

800 W Washington 5th Floor
400 W Congress #521
Phoenix, AZ 85007-2934
Tucson AZ 85701-1352
(602) 542-5141 (520) 628-6595

Disabled individuals requiring special accommodations please call (602) 542-9027

APPLICATION FOR SPECIAL EVENT LICENSE
Fee = $25.00 per day for 1-10 day events only
A service fee of $25.00 will be charged for all dishonored checks (A.R.S.§ 44-6852)

NOTE: THIS DOCUMENT MUST BE FULLY COMPLETED OR IT WILL BE RETURNED.

PLEASE ALLOW **10** BUSINESS DAYS FOR PROCESSING

****Application must be approved by local government before submission to Department of Liquor Licenses and Control. (Section #20)**

DLLC USE ONLY
LICENSE #

SAMPLE

1. Name of Organization:_____

2. Non-Profit/I.R.S. Tax Exempt Number:_____

3. The organization is a: (check one box only)
   - ☐ Charitable
   - ☐ Civic
   - ☐ Religious
   - ☐ Fraternal (must have regular membership and in existence for over 5 years)
   - ☐ Political Party, Ballot Measure, or Campaign Committee

4. What is the purpose of this event?_____

5. Location of the event:_____
   Address of physical location (Not P.O. Box) City County Zip

Applicant must be a member of the qualifying organization and authorized by an Officer, Director or Chairperson of the Organization named in Question #1. (Signature required in section #18)

6. **Applicant**:_____
   Last First Middle Date of Birth

7. Applicant's Mailing Address:_____

8. Phone Numbers: (___)_____ (____)_____ (____)_____
   Site Owner # Applicant's Business # Applicant's Home #

ONLY

9. Date(s) & Hours of Event: (Remember: you *cannot* sell alcohol before 10:00 a.m. on Sunday)

Date Day of Week Hours from A.M./P.M. To A.M./P.M.

Day 1: _____
Day 2: _____
Day 3: _____
Day 4:_____
Day 5:_____
Day 6:_____
Day 7:_____
Day 8:_____
Day 9:_____
Day 10:_____

THIS FORM IS AVAILABLE AT http://www.azliquor.gov/forms

10. Has the applicant been convicted of a felony in the past five years, or had a liquor license revoked?
☐ YES ☐ NO (attach explanation if yes)

11. This organization has been issued a special event license for_____ days this year, including this event

(not to exceed 10 days per year)

12. Is the organization using the services of a promoter or other person to manage the event? ☐ YES ☐ NO

If yes, attach a copy of the agreement.

13. List all people and organizations who will receive the proceeds. Account for 100% of the proceeds.

THE ORGANIZATION APPLYING MUST RECEIVE 25% OF THE GROSS REVENUES OF THE SPECIAL **EVENT LIQUOR SALES.**

Name_____ Percentage

Address:_____

Name_____ Percentage

Address:_____

(Attach additional sheet if necessary)

14. Knowledge of Arizona State Liquor Laws Title 4 is important to prevent liquor law violations. If you have any questions regarding the law or this application, please contact the Arizona State Department of Liquor Licenses and Control for assistance

NOTE: ALL ALCOHOLIC BEVERAGE SALES MUST BE FOR CONSUMPTION AT THE EVENT SITE ONLY.

"NO ALCOHOLIC BEVERAGES SHALL LEAVE SPECIAL EVENT PREMISES."

15. What security and control measures will you take to prevent violations of state liquor laws at this event?

(List type and number of security/police personnel and type of fencing or control barriers if applicable)

_____# Police ☐Fencing

_____#Security personnel ☐Barriers

_____

_____

_____

_____

16. Is there an existing liquor license at the location where the special event is being held? ☐ YES ☐ NO

If yes, does the existing business agree to suspend their liquor license during the time period, and in the area in which the special event license will be in use? ☐ YES ☐ NO

(ATTACH COPY OF AGREEMENT)

_____ (_____)_____

Name of Business Phone Number

17. Your licensed premises are those areas in which you are authorized to sell, dispense, or serve spirituous liquors under the provisions of your license. The following page is to be used to prepare a diagram of your special event licensed premises. Please show dimensions, serving areas, fencing, barricades or other control measures and security positions.

SAMPLE ONLY

THIS FORM IS AVAILABLE AT http://www.azliquor.gov/forms

SPECIAL EVENT LICENSED PREMISES DIAGRAM
(This diagram must be completed with this application)

Special Event Diagram: (Show dimensions, serving areas, and label type of enclosure and security positions)
NOTE: Show nearest cross streets, highway, or road if location doesn't have an address.

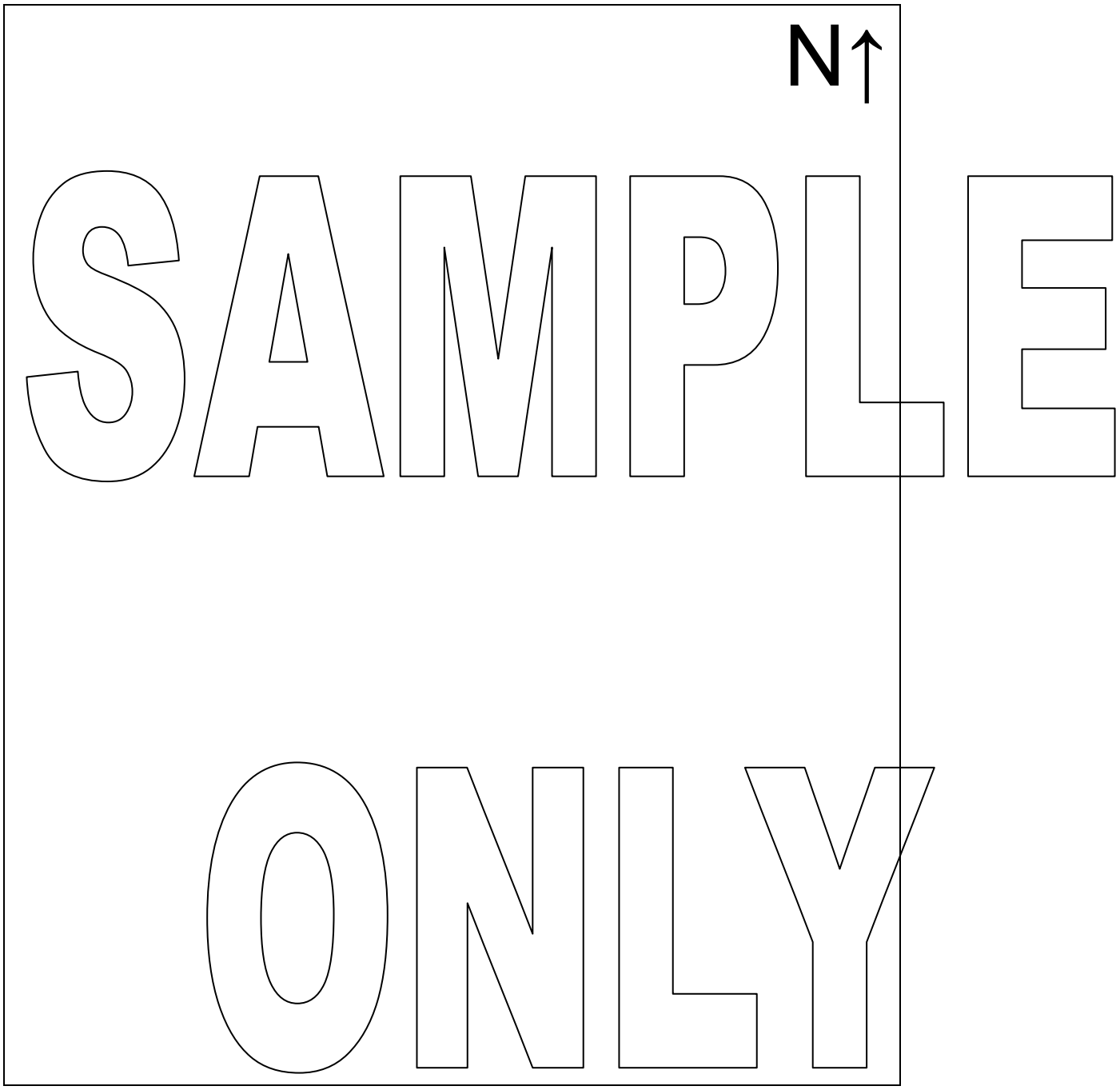

THIS SECTION TO BE COMPLETED ONLY BY AN OFFICER, DIRECTOR OR CHAIRPERSON OF THE ORGANIZATION NAMED IN QUESTION #1

18. I,_____ declare that I am an **Officer/Director/Chairperson** appointing the
(Print full name)
applicant listed in Question 6, to apply on behalf of the foregoing organization for a Special Event Liquor License.

X _____
(Signature (Title/Position) (Date)
(Phone #)

State _____ of County of_____
The foregoing instrument was acknowledged before me this
_____
Day Month Year

My Commission expires on: _____
(Date) (Signature of NOTARY PUBLIC)

SAMPLE

THIS SECTION TO BE COMPLETED ONLY BY THE APPLICANT NAMED IN QUESTION #6

19. I, _____declare that I am the APPLICANT filing this application as
(Print full name)
listed in Question 6. I have read the application and the contents and all statements are true, correct and complete.

X_____State of_____County of_____
Signature The foregoing instrument was acknowledge before me this
_____
Day Month Year

My commission expires on: _____
(Date) Signature of NOTARY PUBLIC

ONLY

You must obtain local government approval. City or County *MUST* recommend event and complete item #20. The local governing body may require additional applications to be completed and submitted 60 days in advance of the event. Additional licensing fees may also be required before approval may be granted.

LOCAL GOVERNING BODY APPROVAL SECTION

20. I,_____ hereby recommend this special event application
Government Official Title

On behalf of_____
City, Town or County Signature of OFFICIAL Date

FOR DLLC DEPARTMENT USE ONLY

Department Comment Section:_____
_____
_____ _____
Employee Date

☐ APPROVED ☐ DISAPPROVED BY:

_____
_____

SECURITY

It is the responsibility of the event coordinator to provide adequate security for an event. The type and location of the event, presence of alcoholic beverages, crowd size and other factors will determine the amount of security needed. All security must be obtained through the Camp Verde Marshal's Office.

The Camp Verde Marshal's Office will review your application and determine the number of officers required. All fees for off duty officers must be paid at least 30 days prior to your event. This fee is payable at the time when the Clerk's Office notifies you that your application is approved.

Off-duty officers:

- $50.00 per hour, per officer
- Minimum of two officers

HEALTH DEPARTMENT PERMITS

As the promoter of an event you are required to submit an Event Coordinator form to the Yavapai County Health Department at least 45 days before the event. You will also be asked to supply a vendor list and event map to the Health Department and Fire Department no later than 5 days before the start of the event.

If you plan to sell food or drink at your event or if you plan to have outside vendors who sell food or drink, you must notify the Yavapai County Health Department at 928-639-8138. All food and drink vendors are required to have a Yavapai County Health Permit before your Special Event Permit will be approved. The Health Department will make an on-site inspection of your food booths prior to opening of event.

YAVAPAI COUNTY COMMUNITY HEALTH SERVICES

ENVIRONMENTAL HEALTH

SAMPLE ONLY

Dear Special Event Organizer/Coordinator

To aid you in complying with state and county laws regarding food and beverages and general event sanitation you should read the following carefully to see what your responsibilities may be regarding your planned special event:

1 Regardless of whether food and/or beverages will be served you will need to complete a "Special Event Coordinator Information Sheet" (enclosed) and file it with Yavapai County Community Health Services at least six weeks prior to your scheduled event. There is no fee for this process. Any changes to your application will need to be filed not later than seven days prior to your event.

2 All vendors of food and/or beverages of any kind will need to complete the "Special Event Application" regardless of their non-profit status or whether food and/or beverage is being sold or given away. Special Event License Applications for vendors can be mailed or emailed to you or the vendor, or found on the Yavapai County web site. For most, there will be a fee. Non-profit organizations wishing to receive a fee reduction will need to come to the department and complete a "Fee Reduction Application". All applications must be completed and on file at least three weeks prior to the event. Failure to submit application in a timely manner may be grounds for disapproving an application.

Sincerely,

Please be sure to transmit the above information (you may make copies of applications) to ANY AND ALL FOOD/BEVERAGE VENDORS OF ANY KIND.

Cecil F. Newell, R.S.
Environmental Health Unit Manager

For questions, DON'T WAIT, give us a call. We want your event to be successful and your role in making the process run smoothly is critical.

1090 Commerce Drive * Prescott, AZ. 86305 (928) 771-3122 (928) 771-3369 FAX
3212 N. Windsong Drive, 5econd Floor * Prescott Valley, AZ. 86314 (928) 583-1000 (928) 771-3379 FAX
10 50uth 6th Street * Cottonwood, AZ 86326 (928) 639-8130 (928) 639-8179 FAX

SPECIAL EVENT COORDINATOR INFORMATION SHEET

SAMPLE ONLY

- A Special Event Information sheet (attached) is required from the event coordinator or food/beverage chairperson. All information is due to Yavapai County Community Health Services six (6) weeks prior to the event. Please include any information about foods provided by your organization for the vendors.
- Please copy and distribute the enclosed Special Event Application Pack to ALL food and beverage vendors. It is extremely important all vendors receive the S.E. Application Pack and return the completed "yellow" pages to our department well in advance of the event.

- All food and/or beverage concessions run by your organization are also required to have temporary food service licenses please submit a completed license application and the required license fee *per booth,* including the hospitality booth/tent.

  Note: Only those vendors dispensing bottled water or canned soda (unopened, from an approved source) are exempt from obtaining a temporary food service license. All other vendors, regardless of product, are required to obtain a license and pay the required license fee per booth.

- A Yavapai County special event license is effective for 14 consecutive days only and for one location only, and for one celebration or special event.

Send information to:

☐1090 Commerce Drive, Prescott, AZ 86305 (928) 771-3149 FAX (928) 771-3369
☐3212 N. Windsong, Prescott Valley, AZ 86314 (928) 583-1015 FAX (928) 771-3379
☐10 S. Sixth Street, Cottonwood, AZ 86326 (928) 639-8138 FAX (928) 639-8179

Special Event Information-Yavapai County Community Health Services
To be Supplied by *Event Coordinator*
Please complete and return this form at least forty-five (45) days before the start of the event. Please submit vendor lists and event maps no later than five (5) week days before the start of the event.

Please return this sheet to:
☐ 1090 Commerce Dr., Prescott, AZ 86305 (928)771-3149…….FAX (928)771-3369
☐ 3212 N. Windsong, Prescott Valley, AZ 86314 (928)583-1015…….FAX (928)771-3379
☐ 10 S. Sixth Street, Cottonwood, AZ 86326 (928)639-8138……FAX (928)639-8179

SAMPLE ONLY

General Event Information

Name of Event_____Sponsoring Organization_____

Date(s)_____to_____Time(s)_____to_____

Location_____
Facility Name Address-Physical Location

Brief Description of Event Site Conditions: (i.e. dirt, grass, pavement)
_____

Estimated event attendance_____

Additional Event Information

Anticipated number of food and beverage booths/concessions_____

Date and time of event set up_____

Restroom facilities for patrons ☐ Public Restrooms ☐ Chemical Toilets Quantity to be supplied_____

Will an approved water source be available for food vendors? ☐ Yes ☐ No

What method of wastewater disposal will be provided for food vendors?_____

How_____

Contact Information

Event Coordinator – Food & Beverage Chairman OR responsible individual

Name_____Address_____Phone_____

Name_____Address_____Phone_____

Scheduled food and beverage concession meetings_____

Supplemental Information

Are dumpsters provided?_____Where?_____

List of food and beverage vendors ☐ Enclosed ☐ Will mail/fax by_____

Map-Location of Temporary Food Vendors: ☐ Enclosed ☐ Will mail/fax by_____

Application prepared by_____

XXXX

SAMPLE

ONLY

SPECIAL EVENT LICENSE APPLICATION PACKAGE FOR YAVAPAI COUNTY

INSTRUCTIONS

Submit the following at least three weeks prior to the special event.

Please call (928)771-3149 Prescott office, or (928) 639-8138, Cottonwood office, or (928) 583-1015, Prescott Valley if you have any questions or need assistance with any part of this application.

1 Completed license application, both sides.

2 Exterior photograph of booth or mobile food unit *and* floor plan of interior of booth or mobile food unit.

3 Check or money order for one of the following licenses. $ 137.00 Temporary food booth. $ 137.00 Mobile food unit -one time event.

4 Return the completed YELLOW forms to Yavapai County Community Health Services. Retain the BLUE forms for your own use at the event.

5. There will be a $55.00 late fee assessed for any application/fee that is not submitted 48 *hours (M-F, working days only) prior to the start of the event*

DEFINITIONS

TEMPORARY FOOD BOOTH means a temporary food establishment at which food or beverage is provided in conjunction with a fair, rodeo, exhibition, or similar event for not more than 14 consecutive days at the same location and same event.

MOBILE FOOD UNIT means a self-propelled or trailer mounted establishment in which food or beverages are composed, compounded, processed, or prepared and from which the food is vended, sold, given away or dispensed.

POTABLE WATER means water that is drinkable and comes from an approved source.

HOT HOLDING means maintaining food continuously at 130° F or above. Acceptable equipment: steam table, crock-pot, hot holding cabinet.

COLD HOLDING means maintaining food continuously at 41°F or lower. Acceptable equipment: refrigerator, freezer, ice chests.

MINIMAL FOOD BOOTH AND MOBILE FOOD UNIT (MFU) REQUIREMENTS

I. Overhead protection, three side walls and flooring is required for food booths. Doors for MFU's must self-close. Screening of openings may also be required. Booths selling only commercially prepackaged foods may not need to meet the booth requirements.

2 Accurate long stem thermometer, which reads from O°F. to 220°F.

3 A dishwashing set-up consisting of three basins for a wash, rinse, sanitize, set-up.

4 Chlorine bleach or other approved sanitizer (iodine or quaternary ammonium) must be used in the sanitizing solution for utensils & equipment AND sanitizing counters & tables. Chlorine test strips or test kit for the approved sanitizer.

5 Approved hand washing facilities with clean running water, soap, paper towels (separate from the dishwashing set-up), and a container to catch and hold wastewater.

6 All foods, ice for drinks, and water must come from approved sources. Ice scoops require handles.

7 Covered garbage or waste can.

8 Applicant and staff need to have current Yavapai County Foodworker Certificates.

9 Any off-site food preparation (if applicable) must take place in a facility approved by the Health Services. This requires a completed and approved Commissary Agreement form.

YAVAPAI COUNTY COMMUNITY HEALTH SERVICES

SPECIAL EVENTS: NOTATION FOR FOOD VENDORS OF PRE-PACKAGED FOOD ONLY.

If the food you are dispensing is completely commercially pre-packaged, you will not be doing *ANY*food preparation and foods are non-potentially hazardous, you may not need to pay the fee for a special event license. If the only food you are preparing is popcorn without flavorings or coatings, a license fee will not be required.

SAMPLE

However, you will need to fill out the application and answer the questionnaire on the back of the application and return them to us so we can issue you a license.

Examples of pre-packaged foods are:

Bottled water
Canned soda
Sealed Ready-to-Eat commercially pre-packaged foods: potato chips/snacks, candy bars, etc.
Sealed Pre-packaged foods: nuts, spices, jam/jellies, dried fruit, pickles/olives, beefjerky, etc.

ONLY

This information. **MAY *NOT*** apply to your business if you are doing any **food sampling**. Please call us for information regarding sampling.

If you have any questions about the products you plan to dispense, please call us!

1090 Commerce Dr.
Prescott, AZ. 86305
(928) 771-3149
(928) 771-3369 FAX

3212 N. Windsong
Prescott Valley, AZ. 86314
(928) 583-1015
(928) 771-3379 FAX

10 S. Sixth St.
Cottonwood,AZ. 86326
(928) 639-8138
FAX (928) 639hB179

ENVIRONMENTAL HEALTH
YAVAPAI COUNTY COMMUNITY HEALTH SERVICES
Application for Special Event License[1]

Feed Booth per Event Per Event $137 ☐ | Late Fee - $55.00 Fee paid less than 48 hours before event | Mobile Food Unit $137 ☐

Name of Event[2]	**Location of event**	Date(s) of Event Hours of Operation
Event Sponsor	Your Phone number(s)	Plan to set up (when)
		Company or Organization
		Name of applicant[3]
		Mailing Address
		City, State, Zip
		Email Address

In what previous special event have you participated in Yavapai County?

Do you have questions about requirements?

The undersigned assumes complete responsibility for the business to be carried out on the premises for which this application for a license is being sought. The undersigned agrees that all business in said premises will be conducted in full compliance with all sanitary regulations applicable thereto and with all county, state, and local laws, rules and ordinances pertaining thereto.

Applicant Signature _____ Date _____

SAMPLE ONLY

The following is for use by YCCHS as acknowledgement of application, receipt of fee payment, applications approval/denial and/or comments.

Amount Paid: Date: Receipt No. Check #:

Additional information needed:

Approval with reservations:

Questions:

Application approval or denial:

Notification:

1090 Commerce Drive, Prescott, AZ 86305, (928)771-3149, FAX (928)771-3369
3212 N. Windsong, Prescott Valley, AZ 86314, (928)583-1015 FAX (928)771-3379
10 South Sixth Street, Cottonwood, AZ 86326, (928)639-8138, FAZ (928)639-8179

[1] If yours is a non-profit organization and the funds from the special event will go to benefit public health you may request an application for reduced fee (no less that $70).
[2] Yavapai County is large with many fairs, festivals, and special events each year. Please tell us exactly which one you are planning to attend, the location and (if applicable) the space number. Please submit a separate application for each event.
[3] The name under which your records will be filed for future reference.

QUESTIONNAIRE

Please answer all the following questions, complete the application on the reverse side, and return to Health Services with the license fee. A simple menu -only one or two foods -with few preparation steps (for example: basic cook-and-serve) works best. Complex food preparation is inappropriate for an outdoor setting and will Dot be approved.

1. List all menu items including drinks._____

_____

_____

_____

2. Will all foods be prepared onsite at the event? Yes___(if yes, skip to item #3)

No___(if no, attached a copy of a completed and signed Commissary Agreement with the licensed food kitchen where food preparation will take place, including the dates and times of food preparation) Complete the following.

How will prepared food(s) be kept hot or cold before and during transportation to the Event?

_____

_____

3. Describe equipment to be used at the event:

Cold holding_____for menu items_____

Hot holding _____for menu items_____

Cooking _____for menu items_____

4. Who will be responsible for checking food temperatures and supervising food handling practices?

_____

5. How will potable drinking water be obtained during the event?_____

_____

6. How will wastewater be disposed of during the event?

Sewer Holding Tank Other_____

7. Do workers have current Yavapai County Foodworker certificates? Yes No
If no, call for information on scheduled classes or alternatives.

SAMPLE ONLY

PLEASE SCALE YOUR BOOTH OR MOBILE UNIT PLAN BELOW:
THIS MUST BE RETURNED WITH YOUR COMPLETED APPLICATION FORM.

FLOOR PLAN

SAMPLE

ONY

Will you be using gloves? Circle one YES NO

Will you bring extra utensils so you don't have to wash dishes in the booth? Circle one: YES NO

Please Print

Name of Booth or MFU_____

Name of Event_____Date of Event_____

Name of Applicant_____

YAVAPAI COUNTY COMMUNITY HEALTH SERVICES

ENVIRONMENTAL HEALTH
COMMISSARY AGREEMENT

By signing his or her name, each party enters into a binding legal contract that cannot be changed except by renegotiation and execution of a new agreement. The signed agreement will remain binding for the term of the mobile off site owner's current Health Services license but under no circumstance for longer than one year. Change in ownership of the mobile/offsite business or in ownership of the commissary or violation of the terms of the agreement will void this contract and result in cessation of the mobile of site business. Resumption can take place only after a new agreement is negotiated and executed.

MOBILE/OFFSITE BUSINESS OWNER'S DECLARATION: I agree to utilize the commissary facility listed below for the following:

1. Food preparation:
2. Storage of all foods, paper goods, beverages and consumables
3. Washing/sanitizing of equipment and utensils.
4. Potable water source
5. Wastewater disposal
6. Special considerations

SAMPLE ONLY

Date	Business Name	Address
Print Name	Phone Number	License Number
Signature		

COMMISSARY OWNER'S DECLARATION: I agree that my establishment has facilities capable of supporting the above mobile/offsite business requirement and I will make my facilities available for the support of the mobile/offsite business

Date	Business Name	Address
Print Name	Phone Number	License Number
Signature		

HEALTH SERVICES ACCEPTANCE:

Signature	Title	Date

FormsiComrnissaryAgree 7-07

1090 Commerce Drive * Prescott, AZ 86305-3700 (928) 771-3122 (928) 771-3369 FAX
3212 N. Windsong Drive, Second Floor * Prescott Valley, AZ 86314 (928) 583-1000 (928) 771-3379 FAX 10 South 6th Street * Cottonwood, AZ 86326 (928) 639-8130 (928) 639-8179 FAX

YAVAPAI COUNTY COMMUNITY HEALTH SERVICES
SPECIAL EVENTS CHECKLIST

CHECKLIST FOR FOOD BOOTHOPERATOR
PLEASE RETAIN THIS CHECKLIST FOR YOUR OWN USE

Yes	No		Approved application or copy of mobile or catering license available at event.
Yes	No		Booth construction complete: waterproof overhead protection, side and rear walls set-up, waterproof ground covering.
Yes	No		All food prepared in booth or unit. If not, list the location where food preparation is done prior to start of event:
Yes	No		No bare hand contact with ready-to-eat food.
Yes	No		Handwash station set-up with liquid soap and paper towels.
Yes	No		Thermometers present to verify food temperatures.
Yes	No		Sanitizer (i.e. bleach) present for ware washing & wiping cloths, test strips.
Yes	No	NA	Hot holding units available to maintain food at 130°F after cooking.
Yes	No	NA	Cold holding space (ice chests or refrigerator) available to keep all potentially hazardous foods at 41°F or less.
Yes	No	NA	Sufficient ice available to help maintain food temperatures.
Yes	No	NA	All condiments or other food products served in squeeze bottles, pump dispensers or containers with self-c1osin2 lids.
Yes	No		Ware washing station provided to wash, rinse and sanitize dishes.
Yes	No		Wastewater disposal area identified.
Yes	No		Food products stored at least 6 inches off the wound and protected.
Yes	No		Potable (drinking) water supply readily available.
Yes	No	NA	Grease disposal area identified.
Yes	No		Garbage containers, plastic bags available.
Yes	No	NA	Foods cooked to proper temperatures.
Yes	No		Yavapai County food handler cards.

SAMPLE ONLY

Food Temperatures (should check hot and cold holding every 2 hours):

Food Item	Temperatures		

SANITIZING

Food contact surfaces such as cutting boards need to be sanitized throughout the day to control cross-contamination.

A container with a solution of 100-200 ppm chlorine bleach must be prepared upon opening. (use 2 capfuls of bleach for every gallon of water). Change the sanitizer as often as necessary to keep it from dropping below 50 ppm (use test strips to check).

BOOTH CONSTRUCTION

Every temporary food booth must have:

3 FULL SIDES (walls) that protect the interior from weather and wind blown dust.

A WATER RESISTANT ROOF (Top).

A CLEANABLE AND STURDY FLOOR

Booths cannot be placed directly over dirt or grass unless plywood or a plastic tarp is used for the floor.

Enclose the front of the booth from the bottom of the service counter down to the ground.

Use the front of the booth for food service only, not for food preparation.
Exposed food items placed on the front service counter require a food guard or cover.

SAMPLE ONLY

COOKING TEMPERATURES	HOLDING TEMPERATURES
Poultry – 165 *F	Reheat foods quickly to 165 F or higher
Ground Meat – 155 F	
Pork - 150*F	
Seafood – 145 F	Hot food must be kept at 130*F
Rare Roast Beef – 130 F	Cold food must be kept at 41*F or lower

DISHWASHING

The utensils and equipment used in food and beverage service are required to be washed and sanitized.

Proper sanitation requires the use of a three-step procedure.

Three adequately sized containers must be set up.

The first container is used for washing and contains hot water and dish soap.

The second container is hot rinse water.

The third container is used for sanitizing. The minimum concentration is 50-100 ppm chlorine bleach. (Use 1 capful of bleach for every gallon of water)

After completing the three steps, all utensils and equipment must be air-dried.

Change the water and replace the wash, rinse and sanitizing solution in the containers frequently to keep the process effective.

SAMPLE

FOOD SERVICE

All food must be from an approved source.

Home canned foods or preparation of food in the home is not allowed.

All food preparation must take place on-site and inside the temporary food establishment. Food prepared off-site must be done in an approved food establishment.

Grills or other cooking equipment may be located outside the booth to comply with local fire codes.

ONY

HAND WASH FACILITY

Hands must be kept clean.

Provide a hand wash facility

and use it frequently.

Provide:

5 GALLON CONTAINER with warm water.

THE SPIGOT OR SPOUT must be adjustable to control the flow of water and provide a steady water stream while the hands are being washed.

CONTAINER FOR CATCHING WASTE WATER,

SOAP,

PAPER TOWELS.

FIRE SAFETY REQUIREMENTS

An event coordinator is required to follow Camp Verde Fire District “Fire Safety Standards”.

Included in your Special Event packet, you will find a booklet that outlines the fire and safety practices found in the Fire and Building Codes adopted by the Town of Camp Verde and the Camp Verde Fire District.

It is the responsibility of the event coordinator to contact the Fire District to discuss your event and set up a time for an inspection.

Camp Verde Fire District
Barbara Rice, Inspector
928-567-9401

Camp Verde Fire Department
26 W. Salt Mine Rd.
P.O. BOX 386 • CAMP VERDE, AZ 86322-0386
BUSINESS 567-9401 • EMERGENCY 567-4123 OR 911

SPECIAL EVENT PERMIT APPLICATION

Fill Out ALL Requested Information, On BOTH Pages, PLEASE PRINT or type

Event Site Location

Building or Site Name _____

Address _____

Town or City Zip Code

Applicant's Company Name:		
Contact Person:	Position:	
Address:		
City:	State: Zip:	E-mail:
Phone Number:	Fax:	

Occupancy/Use of Tent

Assembly ☐ Mercantile ☐ Storage ☐ Other ☐	
Type of Event	How Many Days Is Event Running
Date of Event	Date & Time Ready For Inspection

Tent Information

☐ Single Site or ☐ Multiple Sites	Tent Square Footage
Number of Exits Occupant Load	Tent Fabric Fire Resistance Certificate required at inspection.
Tent Occupied In Hours of Darkness ☐ Yes ☐ No	
Location of Nearest Building (10'min.)	20' Fire Lane Maintained ☐ Yes ☐ No
Site Plan Drawn to Scale ☐ Yes ☐ No	Fire Extinguishers ☐ Yes ☐ No
Exit Signs & Emergency Lights ☐ Yes ☐ No	Electrical Power Provided ☐ Yes ☐ No
Heating Appliances ☐ Yes ☐ No If Yes, Fuel Type and Location	
Cooking Appliances ☐ Yes ☐ No If Yes, Fuel Type and Location	
LP Gas Cylinders are at Least 5' From Tent ☐ Yes ☐ No ☐ N/A	
Arrangement of Seating ☐Chairs ☐Tables & Chairs ☐Bleachers ☐None	

A Site Plan must be submitted showing location of tents, buildings, access and property lines of site.

Suspension of Permit: Any permit issued shall become invalid if the authorized work is not commenced within six months after issuance of the permit, or if the authorized work is suspended or abandoned for a period of six months after the time of commencing the work.

Fire Safety Requirements

For
Camp Verde Outdoor and Indoor Events Involving:
Assemblies, Carnivals, Fairs, Exhibitions, and Tents

2007

Table of Contents **Page No.**

Introduction	pg. 51
Purpose	pg. 51
General Information	pg. 51
Permit Definitions	pg. 51
1. Seating or Site Plans for Indoor or Outdoor Events	pg. 52
2. Candles and Open Flames, Use of	pg. 52
3. Combustible Materials and Waste Disposal	pg. 52
4. Cooking Equipment and Food Warming Devices, Use of	pg. 52
5. Decorative Materials, Use of	pg. 53
6. Electrical Cords, Protection and Use of	pg. 53
7. Existing Occupant Loads	pg. 54
8. Exhibit Booth Construction	pg. 54
9. Exits and Aisle Use	pg. 54
10. Fire Extinguishers	pg. 54
11. Flame Retardants, Applied to Combustible Material	pg. 56
12. Propane, Use of	pg. 56
13. Seating, Use of Chairs	pg. 57
14. Tents, Outdoor Use	pg. 57
15. Tents, Outdoor Use for Cooking	pg. 57
16. Vehicles	pg. 58
Appendix for Open Flame Cooking Options	pg. 59-61

Introduction
This booklet outlines the fire safety practices found in the Fire and Building Codes adopted by the Town of Camp Verde and the Camp Verde Fire District.

Purpose
This booklet consolidates and summarizes fire safety requirements, to be used by event promoters. Several positive outcomes will be accomplished by those who comply with the procedures outlined.

- The promoter can use this booklet to advise vendors of the fire safety requirements for each event.
- Event delays and upset vendors will be avoided.
- Consistent application of the code and inspection requirements year-to-year.
- This booklet is a tool to assist the promoter in laying out the event and creating a detailed floor or site plan that will be reviewed by the Fire District.
- During the Fire District review of the permit application, if the floor or site plan does not comply with specific safety codes, the promoter will be advised of necessary changes that must occur before the event begins.

General Information
1. Call the Camp Verde Fire Prevention office at (928) 567-9401 or the Building Division at (928) 567-8514 to find out if an event requires a permit if this booklet is unclear.
2. All events must comply with the contents of this booklet, whether or not a permit is required. The Fire and Building Codes apply to all events.

Permit Definitions

Assembly: the temporary gathering of 50 or more persons for such purposes as deliberation, education, instruction, worship, entertainment, amusement, drinking, and dining**. A special event permit is required.**

Carnival: a mobile enterprise principally devoted to offering amusement or entertainment to the public in, upon, or by means of temporary structures, rides or any combination of both. **A permit is always required.**

Fair: an enterprise principally dev10oted to the exhibition of products of agriculture or industry in connection with the operation of amusement rides or devices, or concession stands. **A permit is always required.**

Exhibition: an event in which the display of products or services is organized to bring together the provider and user of the products or services. **A special event permit is required.**

Tent or Canopy: a temporary structure, enclosure or shelter constructed of fabric or pliable material supported by any manner. **A permit is required when a tent exceeds 1,500 square feet or when a canopy exceeds 2,000 square feet.**

1. Seating and/or Site Plans for Indoor or Outdoor Events
Detailed plans will eliminate most of the problems that occur when a Fire Inspector does an inspection. Promoters with events that require a permit must attach a scaled or detailed floor or site plan to the permit application. A plan will assist the Fire Department in determining if the event will be safe and in compliance with codes.

The plans ***must show*** the following (provide what is applicable).

- The location and width of all exit doors, aisles in large exhibitor areas, and the main event aisle ways.
- The location, size, and identification number of exhibits, booths, cooking booths, and other displays spaces.
- The location and **size** of propane (LPG) containers.
- The location and width of the fire lanes and the location of fire hydrants.
- The distance from tents to property lines, fences, and structures.
- The location of fire extinguishers, exit lighting, and exit signs.

2. Candles and Other Open Flame Use

Candles and other open flame devices have been the cause of many fires. Listed below are the permitted and safe uses of open flame devices.

- Food preparation will limit flammable liquid use to 1 oz. containers or 1 quart containers that limit flow to 1 oz.
- If the preparation is at the table, a wet towel will be available to smother a possible fire.
- Class 1 and 2 flammable liquids (like kerosene and gasoline) and propane shall not be used for decorative lighting indoors.
- Use approved liquid or solid fuel non-spill containers for decorative lighting. Decorative lighting shades must be non-combustible.
- Candelabra with flaming candles shall be secured in place and located away from combustibles and people.

3. Combustible Materials and Waste Disposal
Combustible merchandise being displayed should be limited to a reasonable quantity. Reserve supplies shall be kept in closed containers and stored neatly. Waste materials, such as empty cardboard boxes and packing materials, must be removed from the exhibit area daily. Promoters shall ensure that trash pickup is provided for the event and the exhibitors daily.

4. Cooking Equipment and Food Warming Devices

Listed below are approved cooking/warming appliances:

- Microwave and electric ovens
- Electric steam tables
- Electric cook top griddles
- Electric single well deep fat fryer or wok

Natural gas cooking appliances meeting the requirements below:

1. Piping materials, shut off valves, and connections used to attach the appliance to the building's natural gas system shall be inspected and approved by the Camp Verde Building Division.

2. During the Fire Department's inspection, the inspection approval document from the Camp Verde Building Division must be available for review.
3. Gas fired appliances shall be placed on a non-combustible surface. If the manufacturer's instructions require the equipment to be vented to the outside, it must be done

Single-well cooking equipment using cooking oils shall:

1. have lids for immediate use to cover and smother a fire
2. be limited to 288 sq. inches of cooking surface
3. be placed on a non-combustible surface
4. be separated from other single-well cooking equipment by a minimum horizontal distance of 2 ft.

Multi-well deep fat frying equipment is **prohibited** unless an approved self-contained hood and ventilation, and suppression system is provided.

Propane/butane use is ***prohibited*** indoors.

Extinguisher Required
A 2A:10BC fire extinguisher and wet towel shall be available in each cooking area and a "**Type K**" extinguisher if deep fat frying or Woks are used.

5. Decorative Materials (not display merchandise)

Decorative materials are used to make a vendor area more attractive or interesting. The following requirements apply to decorative materials:

- Combustible decorative materials shall be flame resistant, excluding table covers.
- Wood less than 1/4" thick shall be treated with a flame-retardant coating.
- Foam plastic objects including mannequins, murals, and signs shall cover less than 10% of a wall, ceiling, or floor area.

Note: Tablecloths *do not need to be flame resistive.*

6. Electrical Cords, Protection, and Use

Outdoor events will require an electrical permit from the Camp Verde Building Dept. A permit is required for portable wiring and equipment for carnivals, exhibition, fairs, and similar attractions.

Unprotected electrical cords are prone to damage. A damaged cord can be the cause of a fire resulting from an electrical short and injuries or death can occur from electrocution. To maintain a safe environment, apply the following criteria to the use of electrical type cords:

Not Permitted: Household, small thin type extension cords. Spliced cords or home made receptacles

- Cords subjected to foot or equipment traffic shall be protected from damage.
- Cords 3/8" or less in diameter shall be covered with hard plastic "office cord covers" or an approved alternate method.
- Cords equal to or larger than 3/8" in diameter shall use a plywood ramp style cover, or an approved alternate method.
- All ***cord covers*** must be secured in place using tape, nails, or other methods.
- Based on definitions, extension cords can have end connectors with multiple female receptacles and can be extended from a receptacle, power tap, or another extension cord.

7. Existing Occupant Loads Assigned to a Structure

A building or room used for exhibits, entertainment, feeding or instructing more than 50 people is assigned an occupant load, that is, a maximum number of people permitted inside the area. It is the responsibility of the promoter and the building owner to see that the maximum number of people allowed in the area is not exceeded.

Pre-established occupant load limits shall be maintained by the facility management and promoter.

The code provision of using "standby personnel" for the sole purpose of maintaining the pre-established occupant load limit may be a requirement for selected permits.

8. Exhibit Booth and Display Requirements

- The travel distance within a booth or a vendor's exhibit area to an accessible exit aisle shall not exceed 50 ft.
- Booths constructed of combustible materials, foam, wood (< 2" x 4"), cloth, and/or ***plastic tarps shall comply with items 5 and 11*** (flame retardants).
- Booth, table and display areas shall be clearly marked so exhibits do not occupy or extend into exits and aisles. ***Do not block exit doors or fire alarm horns and pull stations, and fire extinguishers***.
- Vehicles, RVs, boats, and tents having over 100 sq. ft. of roofed area shall be provided with an approved smoke detector(s) unless all fire ignition sources, such as batteries and power sources are disconnected during non-supervised times.

9. Exits and Aisle Use

It is important that all exits are available for use by men, women, and children at all times and especially during a fire, or other emergency.

Aisles and exits shown on the approved floor or site plans shall be kept clean, clear, and free from obstructions. Easels, signs, displays, and other objects shall not encroach into aisles and exits from the booth, display, or stage areas.

Facility exits, stairs, corridors, and vestibules shall not be used in any way except for exiting. ***Do not block exit doors.***

10. Fire Extinguishers

Many events have an abundance of combustible merchandise, displays, and decorations. Fires have occurred at events because of electrical shorts, a heat source (light bulbs) too close to combustible materials, and cooking fires. When a fire is small, a fire extinguisher can usually put out the fire. The following criteria provide reasonable fire suppression capability.

Each event shall have portable extinguishers, the **minimum size** must be a U.L classification **2A 10BC** and cooking areas using oil must have a **40BC**, and when deep fat frying or using Woks a **"Type K"** is required.

Extinguishers shall have a **current service tag** (serviced within the last 12 months), and be visible and accessible in the booth at all times.

Event promoters shall **use the following matrices** to determine the placement criteria for portable extinguishers. After the criteria are determined the extinguisher locations shall be drawn on the site plan.

Portable Extinguisher Matrix for Indoor Events			
Type of Event	**Extinguisher Placement Requirements X indicates the event requirement**		
Select the category that most resembles your event.	Maximum foot travel distance to extinguishers, 75'.	Maximum foot travel distance to extinguishers, 50'.	Option: Promoter may opt to have every vendor provide an extinguisher.
Animal show with or without display vendors		**X**	**X**
Antique show		**X**	**X**
Boat show with or without display vendors		**X**	**X**
Book show	**X**		
Career fair	**X**		
Cooking booths using oil	**Every cooking booth shall have one 40BC portable extinguisher, deep fat frying or the use of Woks require a Type K extinguisher**		
Concert, graduations, similar people events	**X**		
Craft show or flea markets		**X**	**X**
Gem, gun, knife, or railroad shows with minimal display combustibles	**X**		
Industrial equipment show, without fueled equipment	**X**		**X**
Industrial equipment show, with fueled equipment		**X**	**X**
Motorhome/RV show		**X**	**X**
Vehicle shows		**X**	**X**
Note: These are minimums and during the review of the permit application the reviewer may determine additional portable extinguishers are required.			

Portable Extinguisher Matrix for Outdoor Events			
Type of Event	**Extinguisher Placement Requirement X indicates the event requirement**		
Select the category that most resembles your event. If the category is not shown, consult with the Fire Marshal's office.	Maximum foot travel distance to extinguishers, 75'.	Maximum foot travel distance to extinguishers, 50'.	Option: Promoter may opt to have every vendor or booth have an extinguisher.
Carnival midways	**X**		**X**
Carnival rides	**Every ride shall have at least one 2A 10BC portable extinguisher**		
Cooking booths using oil, any event	**Every cooking booth shall have at least one 40BC portable extinguisher, deep fat frying or the use of Woks require a Type K extinguisher**		
Fair midways	**X**		**X**
Fireworks	**Every discharge area shall have at least one 2A 40BC extinguisher**		
Street markets or fairs	**X**		**X**
Tents, see section 16			
Note: These are minimums and during the review of the permit application the reviewer may determine additional portable extinguishers are required.			

11. Flame Retardants and Flame Resistive Materials

Flame retardants are used to treat different types of materials so fire spread by these materials will be inhibited. Some materials cannot be treated, such as most plastic tarps. Flame retardants that are applied by the booth vendor to a booth's combustible construction and decorative materials (see item 5) will require the booth vendor to provide the flame retardant product information to the Fire Department upon inspection.

Flame resistive materials must be accompanied with a label, package wrapper declaring the material to be flame resistive, or other proof of flame resistive treatment.

12. Propane, Use of

Propane gas used indoors is extremely hazardous. Several high-dollar loss fires have occurred because propane gas leaked from its container and equipment connections have caught fire. Extreme care must be taken when changing propane gas cylinders.

Indoor Use

The use of propane inside of buildings is **prohibited except for**:

There is special cooking equipment approved (listed) by U.L. The equipment is limited to the use of two 10 ounce bottles of butane. This equipment is permitted to be used in the City of Camp Verde. For demonstrations and public exhibitions (not cooking), propane containers are limited to:

12 pound water capacity and 20 feet separation between containers.

Outdoor Use

Propane cylinders less than 500 water gallons in size must be at least 10' from any structure. Propane cylinders 500 water gallons in size must be at least 25' from the structure (not allowed under building eaves). Propane cylinders must be set on a firm foundation or be adequately secured and protected from potential damage.

13. Seating, Use of Chairs

Seating plans for chair arrangements in a structure or tent must be provided as outlined in Item 1. If the number of chairs exceeds 300, the chairs must be bonded together in groups of three or more. In the case of emergency exiting from the area, the bonded chairs will be less likely to be tipped-over or scattered about, thereby not becoming exit obstructions.

14. Tents and Canopies, Outdoor Use

Any tent exceeding 1,500 sq. ft. or canopy exceeding 2,000 sq. ft. must get a permit from the Fire Marshal's office. ***According to Item 1 in this booklet, tented events will need a site plan and large tents will need a floor plan***. When applicable apply the following items:

- Tents and canopies shall be roped, braced, and anchored.
- Tents and canopies shall be made of fire-retardant material, floor covering, and decorative materials shall be flame retardant.
- Post "No Smoking" signs inside.
- No open flame devices are allowed inside.
- Provide one "2A-10BC" (5 lb.) fire extinguisher (FE) for every 3,000 sq. ft. of floor area and within 75' travel distance, **and at least** one "**Type K**" fire extinguisher is to be within 30' of every cooking area deep fat frying or using Woks.
- Fire lanes must be maintained to within 150 feet of any exhibit. Fire lane shall be a minimum of 20 feet in width and have a minimum unobstructed height of 13 feet 6 inches.
- Tents and canopies must be 20' from any building or property line.
- Tents and canopies with up to 199 people must have two 6' **exits**; with 200-499 people, there must be three 6' **exits**; with 500-999 people, there must be four 8' **exits**; and with 1,000-2,000 people, there must be five 10' **exits**, and add an **exit** for each 1,000 people. All exits must be evenly spaced around the tent perimeter. The **number of occupants** is determined by taking the floor area of the tent and divide by 15 (for an exhibit or tables and chairs) or divide by 7 (for chairs only) or by 5 (for standing only) for the event.
- Provide exit signs at each exit. Exit signs must be lighted and have a second source of power if the tent has a capacity of over 100 people.

15. Tents and Canopies, Outdoor Use for Cooking Booths

In addition to tent criteria in item number 14:

- Cooking booths must have 10' of clearance on two sides. **Appliances with open-flame cooking tops, fryers, skillet frying, and WOKS can not be located in a tent or under a canopy**.

Exception Woks, and open flame cooking may occur in a booth constructed as follows. Refer to drawing examples at the end of this document.

1. Use non-combustible siding and roofing materials to construct the main booth or
2. The main booth has a metal hood that vents out the top of the booth and the hood perimeter extends a minimum of 6" beyond all edges of cooking appliances.

- When using Woks or when deep fat frying, each booth must have a **"Type K"** fire extinguisher. Booths with other types of cooking must have a 40BC type fire extinguisher. Fire extinguishers must have a tag attached showing the fire extinguisher was serviced within the last twelve months.

- Propane or flammable liquids must not be stored inside.

- Propane cylinders less than 500 water gallons in size must be **at least 10' from the booth.** Propane cylinders 500 water gallons in size must be **at least 25' from any booth.**

16. Vehicles

Most buildings were never built with the intention of putting gas fueled vehicles inside. Because of the amount of flammable fuel a vehicle can contain, the codes considered the hazard and will only allow vehicles to be displayed within structure if the following conditions are met:

- Batteries shall be disconnected or use a disconnect switch.
- Fuel tanks shall be locked or sealed to prevent tampering.
- Vehicles shall not block or obstruct exits.
- Refueling and fuel storage shall occur outside of a structure in an approved area.
- Vehicles shall contain no more than 5 gallons of gas.

<u>Appendix for Item 15:</u> Examples of cooking booth construction or configurations that would be approved for use. The size, design or appearance is not being represented by the drawing only the concept of a cooking booth that will be safe and in compliance with the International Fire Code.

Appliances with open-flame cooking tops, fryers, skillet frying, and WOKS can not be located in a tent or under a canopy. Open-flame cook tops are burners with visible flames that heat or make contact with Woks, skillets, pans, etc. A secondary hard lid covering the appliances, made of fire-resistive material, and separated by a minimum of 3 feet behind the main booth and from adjacent tents or canopies can be used.

Option 1: Open Flame Cooking with no frying or deep fat frying.

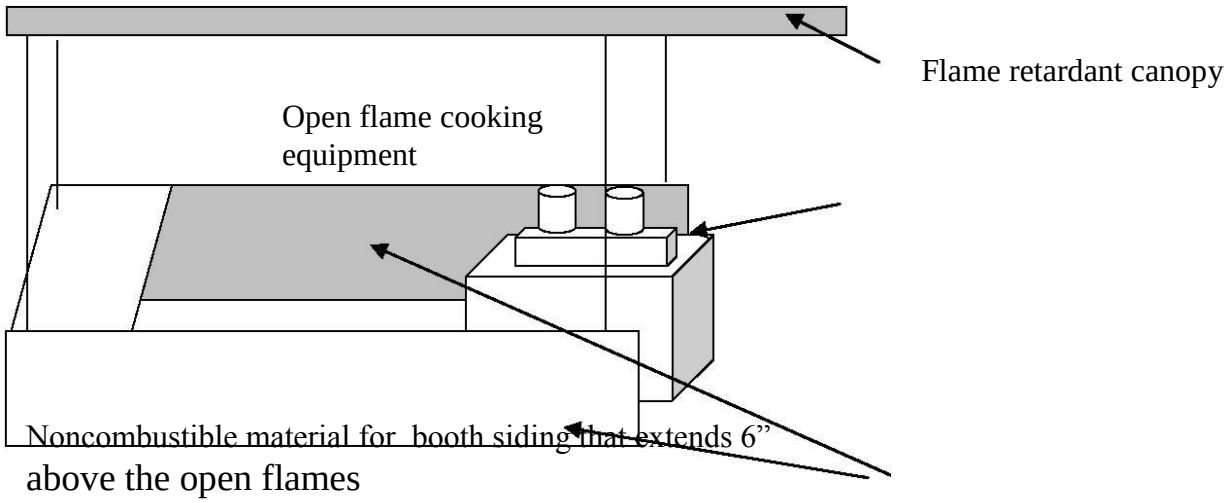

Option 2: Open Flame Cooking with no frying or deep fat frying.

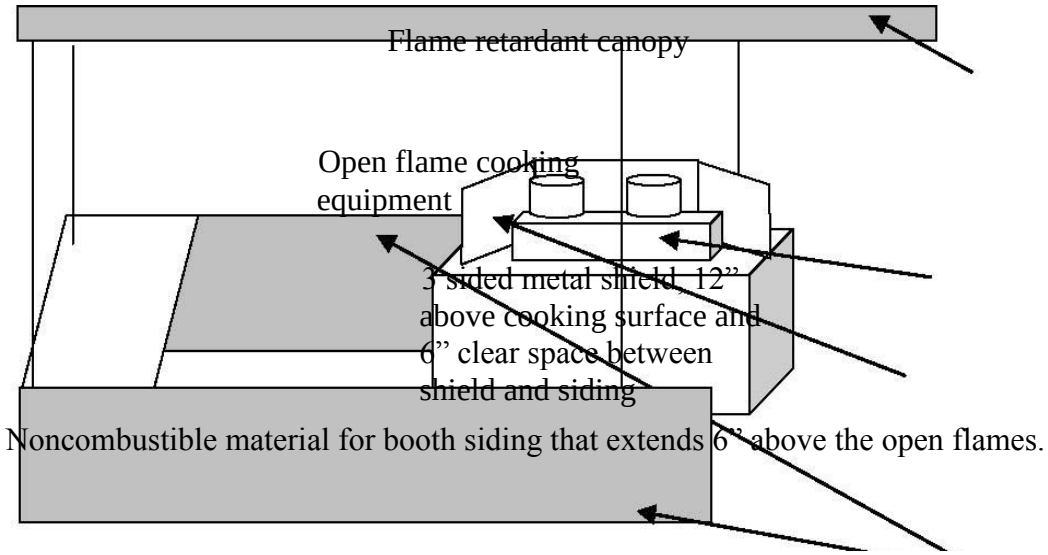

Refer to the following drawings for **additional configuration options** for open flame equipment, deep-fat frying or the use of Woks.

Option 3: Open-Flame Cooking or deep fat frying.

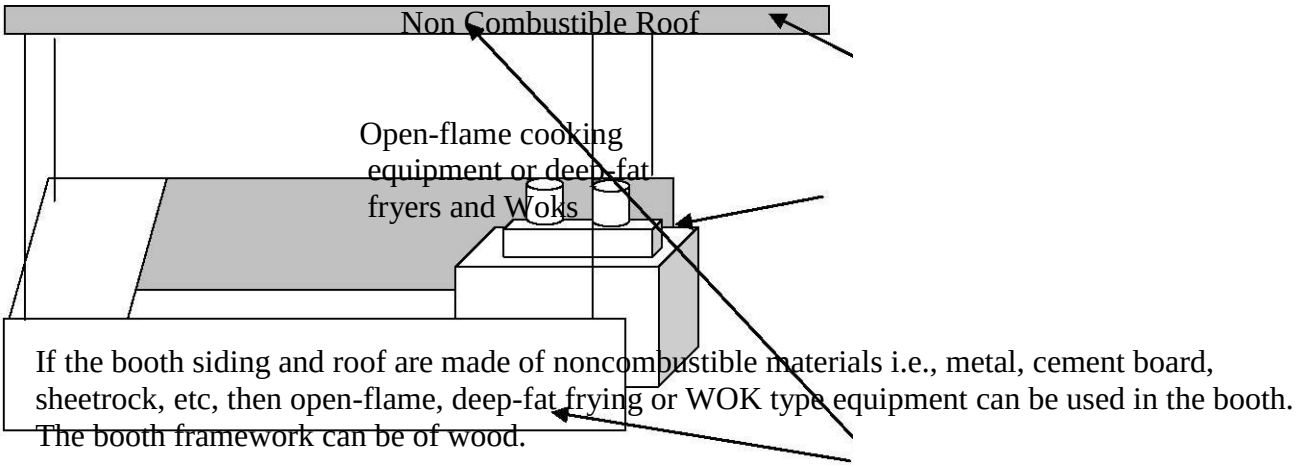

Option 4: Open-Flame Cooking or deep fat frying and Woks.

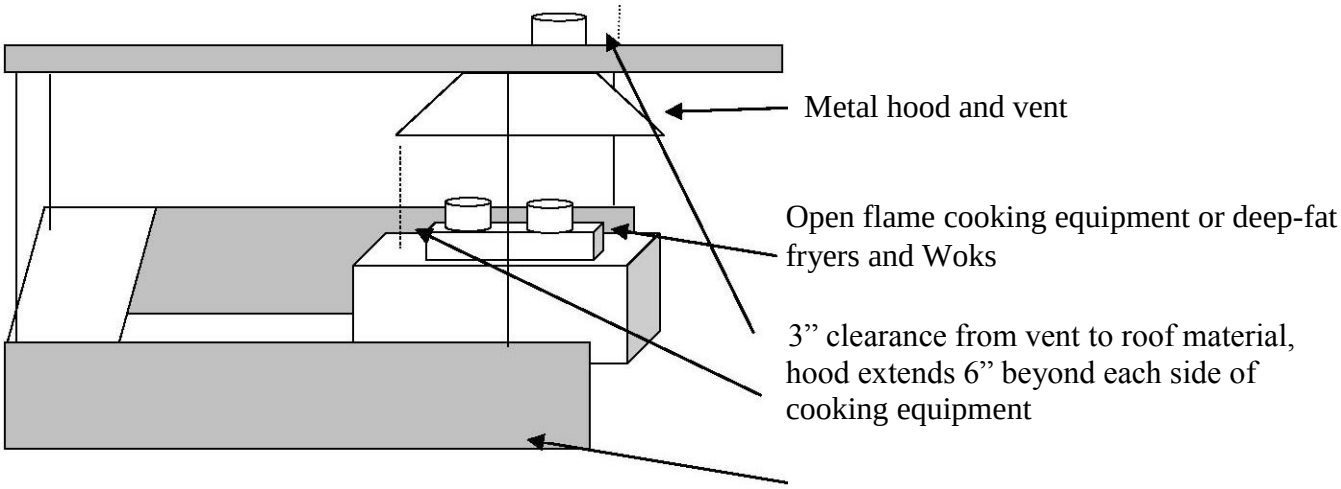

A booth can be made of fire retardant treated combustible material e.g., wood, fabric, etc, if:

1. It has a metal hood that vents a couple feet above the roof.
2. The hood extends at least 6” beyond the perimeter of the cooking equipment.
3. The hood vent has at least 3” clearance from the roofing material unless a double-walled vent is used.
4. 12” clear space must be maintained between the cooking equipment and the sides of the booth unless the shield is used from Option 2 then 6” is permitted.

Option 5: Open-Flame Cooking or deep fat frying and Woks.

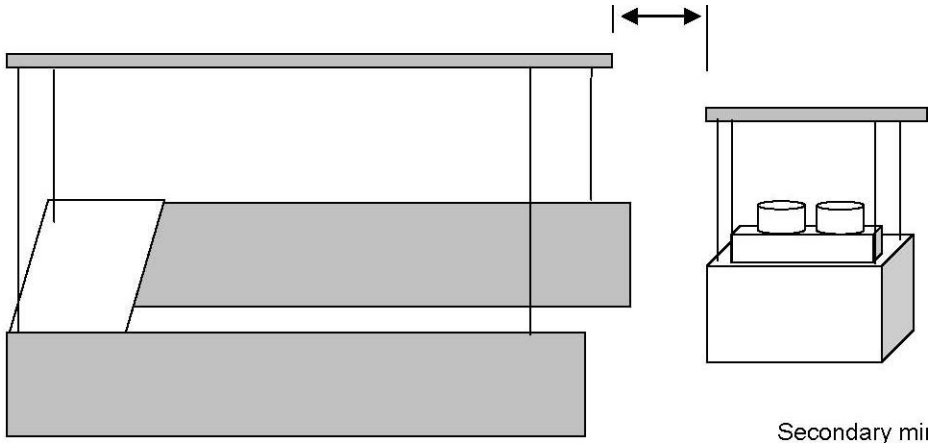

A booth made of fire retardant treated combustible material e.g., wood, fabric, etc, but without a hood and vent cannot have open-flame, deep-fat fryers or WOK type equipment under the booth roof covering or near its sides.

That type cooking equipment can be used if it is separated at least 3’ from the sides and roof of the main booth and adjacent booths. The roof covering for the secondary mini-booth must be metal if located within 3’ to 5’ of the primary booth. Even if it is further away, it is not recommended to use fabric or other combustibles for that roof covering.

TENTS, TEMPORARY STRUCTURES AND VEHICLES

Stakes are not permitted on Town grounds, parks or rights-of-way. All tents and canopies must be weighted down.

Vehicles are not allowed on any grass areas or sidewalk.

If you are hosting an event that requires a vehicle(s) to drive onto a field, you must state this on your Special Event Application. Upon approval of the Parks & Recreation Director, the Parks & Recreation staff will mark the sprinkler heads and event coordinator will be invoiced for costs incurred.

Any damage done by stakes or vehicles, either by the event coordinator or their individual vendors will be the responsibility of the event coordinator.

Canopies and tents must meet the requirements of the “Fire Safety Standards” provided by the Camp Verde Fire Department. A copy of the “Fire Safety Standards” is included in your packet.

Fire lanes must be kept open at all times to allow access for emergency vehicles.